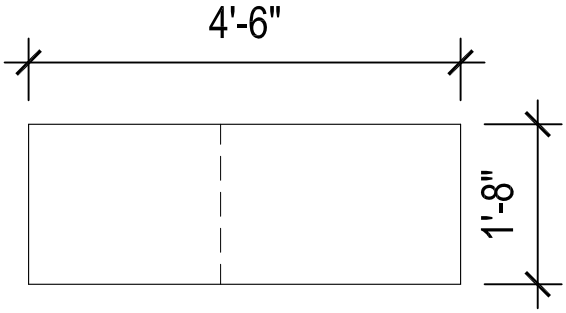

PLAN

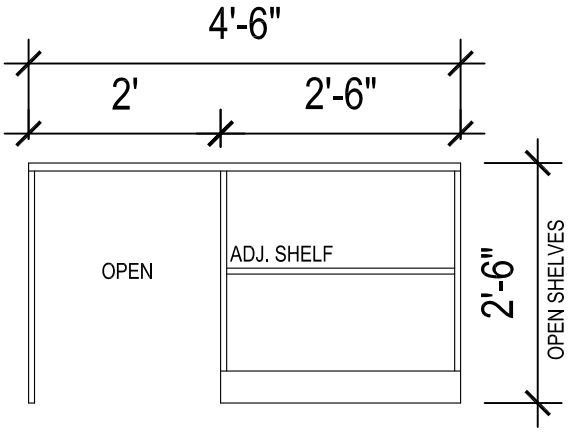

ELEVATION

CREDENZA - OFFICE 211

WCB - OFFICE FURNITURE TENDER

NOVEMBER 26, 2014

Scale:1/2" = 1'-0"

149-12372-00

SK-1

Use or reproduction in whole or part of the following drawings or information contained herein is prohibited without the express consent of the Architecture49 Inc. All rights reserved.