WORKERS COMPENSATION BOARD OF PEI

CHARLOTTETOWN, PEI

NOVEMBER 2014

OFFICE FURNITURE TENDER

GOV. OF PEI RFQ#3912

TABLE OF CONTENTS

Pages

Division 00 - PROCUREMENT AND CONTRACTING REQUIREMENTS

Section 00 21 13 - Instructions to Bidders....4
Section 00 21 20 - Tender Form....5
Section 00 21 30 – Supplementary Bid Information Form....2

Division 01 - GENERAL REQUIREMENTS

Section 01 11 00 - Summary of Work & General Instructions....2
Section 01 14 00 – Work Restrictions....1
Section 01 23 10 - Alternatives....1
Section 01 29 00 - Payment Procedures....4
Section 01 33 00 - Submittal Procedures....4
Section 01 61 00 - Common Product Requirements....4
Section 01 74 11 - Cleaning....1
Section 01 77 00 - Closeout Procedures....1
Section 01 77 10 - Contract Closeout Forms....2
Section 01 78 00 - Closeout Submittals....4

Division 12 - FURNISHINGS

Section 12 50 00 - Furniture....3

Specifications

Furniture, Fixtures, and Equipment Specifications....19

Drawings

ASK-00 Index Sheet
A101 Phasing First Floor
A102 Phasing Second Floor
A103 Phasing Third Floor
ASK-01 Main Floor – Furniture Plan
ASK-02 Second Floor – Furniture Plan
ASK-03 Third Floor – Furniture Plan

END OF TABLE

Part 1 General

1.1 INVITATION

.1 Bid Call

.1 Offers signed under seal, executed, and dated will be received by Procurement Services located at 95 Rochford Street, 2nd Floor Shaw Building, Room 27, Charlottetown, PE C1A 7N8 **by noon local time on Friday, December 5, 2014.**

.2 Offers submitted after above time shall be returned to bidder unopened.

.3 Offers will be opened privately immediately after the time for receipt of Bids.

.4 Amendments to submitted offer will be permitted if received in writing prior to bid closing and if endorsed by same party or parties who signed and sealed offer.

1.2 INTENT

.1 Intent of this Bid call is to obtain an offer to supply and install office furniture for the **WCB OFFICE INTERIOR RENOVATION** located at **14 WEYMOUTH STREET, CHARLOTTETOWN, PE** for a Stipulated Price contract, in accordance with Contract Documents. Note: this tender will not be divided.

.2 Perform Work within time stated in Section 01 11 00 - Summary of Work.

.3 Initiate work within time stated in Section 01 11 00 - Summary of Work.

1.3 CONTRACT DOCUMENTS IDENTIFICATION

.1 Contract Documents are as prepared by Architecture49, located at 410 Mount Edward Road, Unit #1, Charlottetown, PE C1E 2A1 and listed in Table of Contents.

1.4 CONTRACT/BID DOCUMENTS

.1 Agreement Form

.2 Definitions

.1 Bid Documents: Contract Documents supplemented with Instructions to Bidders, Bid Form, and Supplementary Information.

.2 Bid, Offer, or Bidding: Act of submitting an offer under seal.

.3 Bid Price: Monetary sum identified in Bid Form as an offer to perform work.

.3 Availability

.1 Bid Documents may be obtained through Procurement Services – http://www.gov.pe.ca/finance/index.php3?number=1041973

.2 Bid Documents are made available only for purpose of obtaining offers for this project. Their use does not confer license or grant for other purposes.

.4 Examination

.1 Upon receipt of Bid Documents verify that documents are complete.

.2 Immediately notify Procurement Services upon finding discrepancies or omissions in Bid Documents.

.5 Queries/Addenda

.1 Questions will only be addressed if faxed or emailed to Architecture49, Attn: Chad Stretch, at fax #: (902) 367-4647, email: rebecca.muttart@architecture49.com .

.2 Addenda may be issued during bidding period. All addenda become part of Contract Documents. Include costs in Bid Price.

.3 Verbal answers are only binding when confirmed by written addenda.

.4 Clarifications requested by bidders must be in writing by noon Friday, November 28, 2014.

Reply will be in form of an addendum, a copy of which will be forwarded to known bidders no later than twenty-four (24) hours before receipt of Bids.

.5 Questions and responses that are deemed to materially affect the RFQ requirements, project scope, time lines, etc. or to be of interest to all prospective proponents **may** be made available at the Province's option. If so, this would be handled as an addendum while the RFQ is open and made available for download from our PEI Tender Website.

.6 Proponents are responsible to ensure that they are aware of and have complied with any addenda issued by visiting the PEI Tender Website.

Responding to this RFQ **may** require the acknowledgement of a specific addendum, as part of the submission. Acknowledgement requirements, whether optional or mandatory, will be defined in the addendum. The Proponent must monitor for any addenda that may be issued during the full open period of the RFQ.

.7 After receipt of bids and prior to award of any Contract, any bidder may be required to provide the Consultant with additional information clarifying any matters relating to the bidders or the bidder bids, including but not limited to, a further breakdown of the relevant components of the prices or fees set forth in the bid. The Consultant may, at its sole discretion, choose to meet with any or all of the bidders to discuss aspects of their bids that the Consultant determines (in its sole discretion) require such clarification. The Consultant may consider all information obtained and observations made at such meetings as well as any additional information obtained as aforesaid in the evaluation of bids. The Consultant is not, however, obligated to seek clarification of any aspect of any bid, whether or not it has sought clarification from other bidders of any similar or dissimilar aspect of their bid.

.6 Product/System Options

.1 Where Bid Documents stipulate a standard of acceptance, substitutions that are proposed equals may be included in bids subject to bid review (see Section 01 23 10).

.2 When a request to substitute a product is made, Consultant may approve substitution and will issue an Addendum to known bidders.

.3 In submission of substitutions to products specified, Bidders shall include in their Bid, any changes required in work to accommodate such substitutions. A later claim by Bidder for an addition to contract price because of changes in work necessitated by use of substitutions shall not be considered.

.4 Substituted products will be considered if submitted as an attachment to Bid Form.

.5 Submission shall provide sufficient information to enable Consultant to determine acceptability of such products.

.6 Approval to submit substitutions prior to submission of Bids is not required.

1.5 BID SUBMISSION

.1 Bid Depository

.2 Bid Ineligibility

.1 Bids that are unsigned, improperly signed or sealed, conditional, illegible, obscure, contain arithmetical errors, erasures, alterations, or irregularities of any kind, may at discretion of Owner, be declared informal.

.2 Bids with Bid Forms and enclosures which are improperly prepared may at discretion of Owner, be declared informal.

.3 Submissions

.1 Bidders shall be solely responsible for delivery of their Bids in manner and time prescribed.

.2 Submit two copies of executed offer on Bid Forms provided, signed in a sealed opaque envelope, clearly identified with Bidder's name, project name and Owner's name on outside.

.3 Improperly completed information may be cause not to declare Bid informal.

.4 At Owner's discretion, an abstract of submitted Bids may be made available to Bidders following Bid opening.

1.6 BID ENCLOSURES/REQUIREMENTS

.1 Bid Signing

.1 Bid form shall be signed by Bidder.

.2 Sole Proprietorship: Signature of sole proprietor in presence of witness who will also sign. Insert words "Sole Proprietor" under signature.

.3 Partnership: Signature of all partners in presence of witness who will also sign. Insert word "Partner" under each signature.

.4 Limited Company: Signature of duly authorized signing officer(s) in normal signatures. Insert officer's capacity in which signing officer acts, under each signature. If Bid is signed by officials other than President and Secretary of company, or President-Secretary-Treasurer of company, copy of by-law resolution of Board of Directors authorizing them to do so must also be submitted with Bid in Bid envelope.

.5 Joint Venture: Each party of joint venture must execute Bid under respective seals in manner appropriate to such party as described above, similar to requirements of Partnership.

.2 Appendices to Bid Form

.1 Appendix A - Alternatives: described in Section 01 23 10 - Alternatives.

1.7 OFFER ACCEPTANCE/ REJECTION

.1 Duration of Offer

.1 Bids shall remain open to acceptance and irrevocable for a period of forty-five (45) days after the Bid closing date.

.2 Acceptance of Offer

.1 Owner reserves right to accept or reject any or all offers.

.2 After acceptance by Owner, Consultant will issue to successful Bidder, written Bid acceptance.

.3 After Bid has been accepted, unsuccessful Bids will be returned to respective Bidders with submitted Bid securities and other requested enclosures.

Part 2 Products

2.1 NOT USED

.1 Not Used.

Part 3 Execution

3.1 NOT USED

.1 Not Used.

END OF SECTION

1. TENDER FORM

    1. All Bids shall be submitted on the tender provided.

    2. In order to be complete, each bid shall consist of the following:

        .1 Two (2) copies of the Tender Form, completely filled out, signed and sealed.

        .2 Two (2) copies of the Supplementary Bid Information Form, Section 00 21 30, consisting of Appendix A completely filled out.

TENDER FOR: **WORKERS COMPENSATION BOARD OF PEI**
14 WEYMOUTH STREET
CHARLOTTETOWN, PE

TENDER SUBMITTED TO: **ATTENTION: IAN BURGE**
PROCUREMENT SERVICES
95 ROCHFORD STREET
2ND FLOOR SHAW BUILDING, ROOM 27
CHARLOTTETOWN, PE C1A 7N8

TENDER SUBMITTED BY:

_____ Firm

_____ Name

_____ Address

_____ Telephone Number

_____ Contact Person

_____ Email

1. BID PRICE:

.1 We, the undersigned, having carefully examined the site where the Work is to be performed, having become familiar with the local conditions, the character and extent of the work, having determined the quantity and quality of material required, the location and source of supply of the materials and the labour conditions, and having carefully examined the Information to Bidders, Specifications and drawings prepared by **Architecture49 Inc**, hereby offer to enter into a contract to perform the Work required by the above mentioned documents for a Total Bid Price of:

_____

_____Dollars ($ _____)

.2 The Bid Price includes all specified cash allowances, duties, permits, insurances, etc. and furnishing of all equipment, plant, labour, tools, incidentals, and all the other means of construction to do all the Work and furnish all the materials which are necessary to complete the Work in accordance with the Contract Documents. The Bid Price shall constitute full reimbursement for the entire Work of the Contract **EXCLUDING Harmonized Sales Tax and EXCLUDING any additional or deductible allowances or taxes which may be applicable subsequent to this date,** which shall be payable by or to the Owner, in accordance with the above mentioned Documents.

_____INITIAL

2. COMPLETION TIME

.1 Bidder agrees to the phased completion of the _____ Work in coordination with Owner's Construction Schedule.

3. ADDENDA

.1 The undersigned hereby acknowledges that the following Addenda have been received and included for in this Bid.

Addendum No. Dated _____

Addendum No. Dated _____

Addendum No. Dated _____

Addendum No. Dated _____

Addendum No. Dated _____

4. DECLARATIONS

.1 The undersigned hereby declares that:

.1 The "Contractor" shall indemnify and hold harmless WORKERS COMPENSATION BOARD OF PEI, its agents, representatives and employees from and against all claims, demands, losses, costs, damages, actions, suits or proceedings of every nature and kind whatsoever arising out of or resulting from the performance of work (herein called the "claims"), provided that any such claim is caused in whole or in part by any act, error or omission, including, but not limited to, those of negligence, of the "Contractor" or anyone directly or indirectly employed by the "Contractor" or anyone for whom the "Contractor" may be liable.

.1 The "Contractor" shall maintain, as a minimum, general liability insurance providing not less than Two Million Dollars ($2,000,000) coverage and shall add WORKERS COMPENSATION BOARD OF PEI as an additional insured and provide whatever information WORKERS COMPENSATION BOARD OF PEI may require on the insurance that is available.

.2 The policy shall include, but not be limited to, bodily and personal injury, property damage, non-owned automobile liability, cross liability, blanket contractual liability and 30 days' notice of cancellation to the insured and WORKERS COMPENSATION BOARD OF PEI.

.3 The policy required by this Agreement shall be in a form and with insurers satisfactory to WORKERS COMPENSATION BOARD OF PEI. The foregoing insurance shall be primary and not require the sharing of any loss by any insurer of WORKERS COMPENSATION BOARD. A certified copy of the policy shall be delivered to WORKERS COMPENSATION BOARD OF PEI prior to execution of the agreement. Default of delivery or receipt by WORKERS COMPENSATION BOARD

OF PEI shall not be construed as acknowledgment or concurrence that there has been compliance with the terms of this agreement.

.2 We are in good standing with the Worker's Compensation Board for the Province of Prince Edward Island as per requirements Appendix C. para 29.3.

.3 No person, firm, or cooperation other than the undersigned has any interest in this Bid or in the proposed contract for which this Bid is made and that the tender was made without collusion or fraud.

.4 This Bid is open to acceptance for a period of forty-five (45) days from the date of Tender closing.

.5 To take out and maintain personal liability insurances minimum $2 M coverage. and provide one (1) copy of all insurance policies to the Owner within ten (10) days after notification of acceptance.

.6 That unless and until a formal agreement is prepared and executed, this Bid, together with the Owner's letter of acceptance thereof, shall constitute a binding contract with the Owner.

.7 To mobilize and start Work on the project upon notice of written acceptance.

.8 The Owner is not bound to accept the lowest or any Tender which may be received.

.9 The Owner is not bound to accept any Tender with product alternatives that the Consultant does not accept as equals.

7. SUPERINTENDENT

i) Name of Proposed Superintendent:

_____

ii) Years of Experience with Contractor's Company: _____

8. CORRESPONDENCE:

The Consultant may be contacted in writing at the addresses below:

Consultant

Architecture49 Inc
410 Mount Edward Road, Unit #1
Charlottetown, PE C1E 2A1

9. CONTRACTORS, SIGNATURES, SEAL

SIGNED, SEALED AND SUBMITTED FOR AND ON BEHALF OF:

_____
Company Name

_____

_____

_____
Address

_____	_____
Signature	Witness
_____	_____
Name & Title	Name & Title
_____	
Date	

END OF TENDER FORM

Part 1 General

1.1 SUPPLEMENTARY BID INFORMATION

.1 In accordance with Document 00 21 13 - Instructions to Bidders and the Bid Form, we provide the Supplementary Bid Information Appendices listed below and attached. The information provided shall be considered and integral part of the Bid Form.

.2 The Appendices attached are identified and appended as follows:

.1 **Appendix A** - Alternatives: Include cost variation to Bid price and applicable to work.

APPENDIX A – ALTERNATIVES (Refer To Section 01 23 10 – Alternatives)

.1 The following is the list of Itemized Alternatives referred to in the Bid Form. Bidder to add additional line items as required.

Specified Product ('Standard of Acceptance')	Alternative Product (Proposed Equal)
1.	
2.	
3.	
4.	
5.	

Note: Bidder to provide any supplementary information necessary for Consultant review to establish the validity of the proposed equal.

END OF SECTION

Part 1 General

1.1 SECTION INCLUDES

.1 Title and description of Work.

.2 Contract Method.

.3 Work by others.

.4 Work sequence.

.5 Contractor use of premises.

.6 Owner occupancy.

1.2 WORK COVERED BY CONTRACT DOCUMENTS

.1 Work of this Contract comprises the renovation of **WCB Office Interior Renovation**, located at **14 Weymouth Street, Charlottetown, PEI.**

1.3 SCOPE OF WORK

.1 Work of this contract comprises but is not limited to:

- Dismantle existing furniture
- Removal of existing furniture from site to Owner's designated storage facility (local).
- Supply and Installation of new office furniture

1.4 CONTRACT METHOD

.1 Construct Work under stipulated price contract.

1.5 WORK SEQUENCE

.1 Coordinate phased sequence of work with General Contractor, Consultant, and Owner's representative.

.2 Maintain fire access/control.

1.6 CONTRACTOR USE OF PREMISES

.1 Contractor shall limit use of premises for Work, for storage, and for access, to allow;

.1 Work by other contractors.
.2 Public access to site.
.3 Maintain fire access/control.

.2 Coordinate use of premises under direction of Owner's representative. Provide Owner's representative daily briefings during work activites.

1.7 OWNER OCCUPANCY

.1 Owner will occupy premises during entire construction period for execution of normal operations.

.2 Cooperate with Owner's representative in scheduling operations to minimize conflict and to facilitate safe and efficient Owner usage.

Part 2 Products

2.1 NOT USED

.1 Not used.

Part 3 Execution

3.1 NOT USED

.1 Not used.

END OF SECTION

Part 1 General

1.1 SECTION INCLUDES

.1 Special scheduling requirements.

1.2 SPECIAL REQUIREMENTS

.1 All Work inside the existing WCB office that could impact on existing operations, is to be conducted between the hours of 5:00 p.m. to midnight daily.

.2 Further to Item 1.4.1 above note that WCB will approve daytime work on Saturdays and Sundays with hours coordinated with Owner's representative.

.3 Parking to be coordinated with Owner's representative.

Part 2 Products

2.1 NOT USED

Part 3 Execution

3.1 NOT USED

END OF SECTION

Part 1 General

1.1 SECTION INCLUDES

.1 Product Installation Alternatives to work.

.2 Incorporation of accepted Alternatives into Agreement.

1.2 RELATED SECTIONS

.1 Section 00 21 13 - Instructions to Bidders

.2 Section 00 21 30 – Supplementary Bid Information Form – Appendix A Alternatives

1.3 STANDARD OF ACCEPTANCE

.1 Tender documents stipulate pertinent requirements for products and methods to achieve the Work as ‘Standards of Acceptance’.

.2 Alternatives to the Standard of Acceptance can be included in bid provided products are equals to the products identified as the Standard of Acceptance.

.3 Where bid includes products other than the Standard of Acceptance, the bid is to include pertinent product information clearly itemized for review by Consultant..

1.4 AWARD/SELECTION OF ALTERNATIVES

.1 Indicate variation of Bid Price for Alternatives described below and listed in Supplementary Bid Information Form. Note that this form requests a 'difference' in Bid Price by adding to or deducting from the base Bid price.

.2 In accordance with CCDC Document No. 23 - A Guide to Calling Bids and Awarding Contracts, low Bid shall be determined on basis of lowest Bid in accordance with Contract Documents on which Project is to be actually constructed, including those alternatives for which prices have been invited and which are to be incorporated in the Work.

Part 2 Products

2.1 NOT USED

Part 3 Execution

3.1 NOT USED

END OF SECTION

Part 1 General

1.1 SECTION INCLUDES

.1 Substantial performance

.2 Schedule of values.

1.2 REFERENCES

.1 Atlantic Procurement Agreement.

1.3 PAYMENT PROCEDURES

.1 Payment procedures to be negotiated with successful bidder.

END OF SECTION

Part 1 General

1.1 SECTION INCLUDES

.1 Shop drawings and product data.

.2 Samples.

.3 Certificates and transcripts.

1.2 RELATED SECTIONS

.1 Section 01 33 00 - Submittal Procedures.

.2 Section 01 78 00 - Closeout Submittals.

1.3 ADMINISTRATIVE

.1 Submit to Consultant submittals listed for review. Submit with reasonable promptness and in orderly sequence so as to not cause delay in Work. Failure to submit in ample time is not considered sufficient reason for an extension of Contract Time and no claim for extension by reason of such default will be allowed.

.2 Work affected by submittal shall not proceed until review is complete.

.3 Review submittals prior to submission to Consultant. This review represents that necessary requirements have been determined and verified, or will be, and that each submittal has been checked and coordinated with requirements of Work and Contract Documents. Submittals not stamped, signed, dated and identified as to specific project will be returned without being examined and shall be considered rejected.

.4 Notify Consultant, in writing at time of submission, identifying deviations from requirements of Contract Documents stating reasons for deviations.

.5 Verify field measurements and affected adjacent Work are coordinated.

.6 Contractor's responsibility for errors and omissions in submission is not relieved by Consultant review of submittals.

.7 Contractor's responsibility for deviations in submission from requirements of Contract Documents is not relieved by Consultant review.

.8 Keep one reviewed copy of each submission on site.

1.4 SHOP DRAWINGS AND PRODUCT DATA

.1 Required Shop Drawings:

.1 Provide scaled CAD Layouts showing systems furniture components and their relationships to one another and site conditions.

.2 Manufacturer’s data and samples.

.2 The term "shop drawings" means drawings, diagrams, illustrations, schedules, performance charts, brochures and other data which are to be provided by Contractor to illustrate details of a portion of Work.

.3 Indicate materials, methods of construction and attachment or anchorage, erection diagrams, connections, explanatory notes and other information necessary for completion of Work. Where articles or equipment attach or connect to other articles or equipment, indicate that such items have been coordinated, regardless of Section under which adjacent items will be supplied and installed. Indicate cross references to design drawings and specifications.

.4 Allow 5 business days for Consultant's review of each submission.

.5 Adjustments made on shop drawings by Consultant are not intended to change Contract Price. If adjustments affect value of Work, state such in writing to Consultant prior to proceeding with Work.

.6 Make changes in shop drawings as Consultant may require, consistent with Contract Documents. When resubmitting, notify Consultant in writing of any revisions other than those requested.

.7 Accompany submissions with transmittal letter, in duplicate, containing:

- .1 Date
- .2 Project title and number
- .3 Contractor's name and address
- .4 Identification and quantity of each shop drawing, product data and sample
- .5 Other pertinent data

.8 Submissions shall include:

- .1 Date and revision dates
- .2 Project title and number
- .3 Name and address of:
  - .1 Subcontractor
  - .2 Supplier
  - .3 Manufacturer
- .4 Contractor's stamp, signed by Contractor authorized representative certifying approval of submissions, verification of field measurements and compliance with Contract Documents.
- .5 Details of appropriate portions of Work as applicable:
  - .1 Fabrication
  - .2 Layout, showing dimensions, including identified field dimensions, and clearances
  - .3 Setting or erection details
  - .4 Capacities
  - .5 Performance characteristics
  - .6 Standards
  - .7 Relationship to adjacent work

.9 After Consultant's review, distribute copies.

.10 Submit 8 prints or electronic copy of shop drawings for each requirement requested in specification Sections and as consultant may reasonably request.

.11 Submit 8 or electronic copies of product data sheets or brochures for requirements requested in specification Sections and as requested by Consultant where shop drawings will not be prepared due to standardized manufacture of product.

.12 Delete information not applicable to project.

.13 Supplement standard information to provide details applicable to project.

.14 If upon review by Consultant, no errors or omissions are discovered or if only minor corrections are made, copies will be returned and fabrication and installation of Work may proceed. If shop drawings are rejected, noted copy will be returned and resubmission of corrected shop drawings, through same procedure indicated above, must be performed before fabrication and installation of Work may proceed.

.15 The review of shop drawings by Consultant is for sole purpose of ascertaining conformance with general concept. This review shall not mean that approval of the detail design inherent in shop drawings, responsibility for which shall remain with Contractor submitting same, and such review shall not relieve Contractor of responsibility for errors or omissions in shop drawings or of responsibility for meeting all requirements of construction and Contract Documents. Without restricting generality of foregoing, Contractor is responsible for dimensions to be confirmed and correlated at job site, for information that pertains solely to fabrication processes or to techniques of construction and installation and for co-ordination of Work of all sub-trades.

1.5 SAMPLES

.1 Submit for review samples in duplicate as requested in respective specification Sections. Label samples with origin and intended use.

.2 Deliver samples prepaid to Consultant's business address.

.3 Notify Consultant in writing, at time of submission of deviations in samples from requirements of Contract Documents.

.4 Where colour, pattern or texture is criterion, submit full range of samples.

.5 Adjustments made on samples by Consultant are not intended to change Contract Price. If adjustments affect value of Work, state such in writing to Consultant prior to proceeding with Work.

.6 Make changes in samples which Consultant may require, consistent with Contract Documents.

.7 Reviewed and accepted samples will become standard of workmanship and material against which installed Work will be verified.

1.6 CERTIFICATES AND TRANSCRIPTS

.1 Immediately after award of Contract, submit Workers' Compensation Board status.

.2 Submit transcription of insurance immediately after award of Contract.

Part 2 Products

2.1 NOT USED

.1 Not Used.

Part 3 Execution

3.1 NOT USED

.1 Not Used.

END OF SECTION

Part 1 General

1.1 SECTION INCLUDES

.1 Product quality, availability, storage, handling, protection, and transportation.

.2 Manufacturer's instructions.

.3 Quality of Work, coordination and fastenings.

.4 Existing facilities.

1.2 RELATED SECTIONS

.1 Section 01 73 03 Execution Requirements

1.3 REFERENCE STANDARDS

.1 Canadian Construction Association

.1 CCA 17 1996

.2 Within text of each specifications section, reference may be made to reference standards.

.3 Conform to these reference standards, in whole or in part as specifically requested in specifications.

.4 If there is question as to whether any product or system is in conformance with applicable standards, Consultant reserves right to have such products or systems tested to prove or disprove conformance.

.5 Cost for such testing will be born by Owner in event of conformance with Contract Documents or by Contractor in event of non-conformance.

.6 Conform to latest date of issue of referenced standards in effect on date of submission of Bids, except where specific date or issue is specifically noted.

1.4 QUALITY

.1 Products, materials, equipment and articles (referred to as products throughout specifications) incorporated in Work shall be new, not damaged or defective, and of best quality (compatible with specifications) for purpose intended. If requested, furnish evidence as to type, source and quality of products provided.

.2 Defective products, whenever identified prior to completion of Work, will be rejected, regardless of previous inspections. Inspection does not relieve responsibility, but is precaution against oversight or error. Remove and replace defective products at own expense and be responsible for delays and expenses caused by rejection.

.3 Should any dispute arise as to quality or fitness of products, decision rests strictly with Consultant based upon requirements of Contract Documents.

.4 Unless otherwise indicated in specifications, maintain uniformity of manufacture for any particular or like item throughout building.

.5 Permanent labels, trademarks and nameplates on products are not acceptable in prominent locations, except where required for operating instructions, or when located in mechanical or electrical rooms.

1.5 AVAILABILITY

.1 Immediately upon signing Contract, review product delivery requirements and anticipate foreseeable supply delays for any items. If delays in supply of products are foreseeable, notify Consultant of such, in order that substitutions or other remedial action may be authorized in ample time to prevent delay in performance of Work.

.2 In event of failure to notify Consultant at commencement of Work and should it subsequently appear that Work may be delayed for such reason, Consultant reserves right to substitute more readily available products of similar character, at no increase in Contract Price or Contract Time.

1.6 STORAGE, HANDLING AND PROTECTION

.1 Handle and store products in manner to prevent damage, adulteration, deterioration and soiling and in accordance with manufacturer's instructions when applicable.

.2 Store packaged or bundled products in original and undamaged condition with manufacturer's seal and labels intact. Do not remove from packaging or bundling until required in Work.

.3 Protect products subject to damage from weather during handling.

.4 Remove and replace damaged products at own expense and to satisfaction of Consultant.

.5 Touch-up damaged factory finished surfaces to Consultant's satisfaction. Use touch-up materials to match original. Do not paint over name plates.

.6 Delivery and Installation schedule instructions

.1 Delivery and Schedule: To be determined.

.2 Installation Schedule: Delivery of goods from Owner’s designated storage facility and installation to Owner site to be coordinated with General Contractor’s Phased Construction Schedule. Note deliveries and installation activities are to be phased (see phasing plans in drawing package). The site contact for the delivery will be Larry Phelan – WCB.

Delivery of goods from storage facility to site to be after hours, between 6:00 pm and 10:00 pm, weekdays or on weekends at times coordinated with Owner’s representative. Contractor to coordinate with Owner’s representative for access to site.

Installation of goods is to be completed after Owner’s typical working hours, Monday to Friday, and on weekends with hours coordinated with Owner’s representative.

1.7 TRANSPORTATION

.1 Pay costs of transportation of products required in performance of Work.

1.8 MANUFACTURER'S INSTRUCTIONS

.1 Unless otherwise indicated in specifications install or erect products in accordance with manufacturer's instructions. Do not rely on labels or enclosures provided with products. Obtain written instructions directly from manufacturers.

.2 Notify Consultant in writing, of conflicts between specifications and manufacturer's instructions, so that Consultant may establish course of action.

.3 Improper installation or erection of products, due to failure in complying with these requirements, authorizes Consultant to require removal and re-installation at no increase in Contract Price or Contract Time.

1.9 QUALITY OF WORK

.1 Ensure Quality of Work is of highest standard, executed by workers experienced and skilled in respective duties for which they are employed. Immediately notify Consultant if required Work is such as to make it impractical to produce required results.

.2 Do not employ anyone unskilled in their required duties. Consultant reserves right to require dismissal from site, workers deemed incompetent or careless.

.3 Decisions as to standard or fitness of Quality of Work in cases of dispute rest solely with Consultant, whose decision is final.

1.10 CO-ORDINATION

.1 Ensure cooperation of workers in laying out Work. Maintain efficient and continuous supervision.

.2 Be responsible for coordination with Owner’s Representative, Consultant, and General Contractor.

1.11 CONCEALMENT

.1 Before installation, inform Consultant if there is interference. Install as directed by Consultant.

1.12 REMEDIAL WORK

.1 Perform remedial work required to repair or replace parts or portions of Work identified as defective or unacceptable. Coordinate adjacent affected Work as required.

.2 Perform remedial work by specialists familiar with materials affected. Perform in a manner to neither damage nor put at risk any portion of Work.

.3 All remedial work to be to the approval of Consultant.

1.13 LOCATION OF FIXTURES

.1 Consider location of fixtures, outlets, and mechanical and electrical items indicated as approximate.

.2 Inform Consultant of conflicting installation. Install as directed.

1.14 FASTENINGS

.1 Prevent electrolytic action between dissimilar metals and materials.

.2 Space anchors within individual load limit or shear capacity and ensure they provide positive permanent anchorage. Wood, or any other organic material plugs are not acceptable.

.3 Keep exposed fastenings to a minimum, space evenly and install neatly.

.4 Fastenings which cause spalling or cracking of material to which anchorage is made are not acceptable.

1.15 PROTECTION OF WORK IN PROGRESS

.1 Prevent overloading of any part of building.

.2 Execute work by methods to avoid damage to other work. Contractor is to pay costs associated with any required repairs resulting from damage caused by Contactor's activites.

END OF SECTION

Part 1 General

1.1 SECTION INCLUDES

.1 Progressive cleaning.

.2 Final cleaning.

1.2 REFERENCE STANDARDS

.1 Canadian Construction Association

.1 CCA 17 1996.

1.3 PROJECT CLEANLINESS

.1 Maintain Work in tidy condition, free from accumulation of waste products and debris,.

.2 Remove waste materials from site daily. Do not burn waste materials on site

.3 Use only Low-VOC cleaning materials recommended by manufacturer of surface to be cleaned, and as recommended by cleaning material manufacturer.

.4 As phased installations are completed, work is to be cleaned and readied for Owner's use and review by Consultant.

Part 2 Products

2.1 NOT USED

.1 Not Used.

Part 3 Execution

3.1 NOT USED

.1 Not Used.

END OF SECTION

Part 1 General

1.1 SECTION INCLUDES

.1 Administrative procedures preceding preliminary and final inspections of Work.

1.2 RELATED SECTIONS

.1 Section 01 78 00 - Closeout Submittals.

1.3 INSPECTION AND DECLARATION

.1 Contractor's Inspection: Contractor and all Subcontractors shall conduct an inspection of Work, identify deficiencies and defects, and repair as required to conform to Contract Documents.

.1 Notify Consultant in writing of satisfactory completion of Trade Contractor's Inspection and that corrections have been made.

.2 Request Consultant's review.

.2 Consultant's review: Consultant and Contractor will perform review of Work to identify obvious defects or deficiencies. Contractor shall correct Work accordingly.

.3 Completion: submit written certificate that following have been performed:

.1 Work has been completed and inspected for compliance with Contract Documents.

.2 Defects have been corrected and deficiencies have been completed.

.3 Operation of systems have been demonstrated to Owner's personnel.

.4 Work is complete and ready for Final Review.

.4 Final Review: when items noted above are completed, request final review of Work by Owner, Consultant, and Contractor. If Work is deemed incomplete by Owner and Consultant, complete outstanding items and request reinspection.

.5 Declaration of Substantial Performance: when Owner and Consultant consider deficiencies and defects have been corrected and it appears requirements of Contract have been substantially performed, make application for certificate of Substantial Performance.

.6 Commencement of Lien and Warranty Periods: date of Owner's acceptance of submitted declaration of Substantial Performance shall be date for commencement for warranty period and commencement of lien period unless required otherwise by lien statute of Place of Work.

END OF SECTION

APPENDIX "A"
SUBSTANTIAL PERFORMANCE INSPECTION FORM

CONTRACTOR _____

DATE OF SUBSTANTIAL PERFORMANCE _____

.1 Review for above-described Work was carried out on

_____ (date)

by _____ (Owner)

_____ (Consultant)

_____ (Contractor)

for the purpose of determining items not in accordance with the Contract Documents.

.2 The items which are not in accordance with the Contract Documents and require correction under the Contract Agreement are listed as an attachment to this Document.

Contractor's Certification

I hereby Certify that the Work has been executed in accordance with the Contract Documents with the exception of deficiencies listed herewith. The undersigned hereby agrees that, notwithstanding the generality of the foregoing, the acceptance of the Work shall not prejudice any rights of the Owner or affect any liabilities of the undersigned Contractor pursuant to the provisions of the Contract.

Contractor	Date

Owner's Acceptance

I hereby accept the Work on behalf of the Owner providing that the deficiencies listed herewith are completed. This acceptance is not to be construed as relieving the Contractor from the responsibility to correct other defects in the Work, whether latent or patent, as may become apparent within the Guarantee/Warranty period. This acceptance is made without prejudice to the rights of the Owner or to the liabilities of the Contractor which may arise and/or continue after acceptance of the Work.

Owner	Date

The following is a list of deficiencies to be corrected. This acceptance is not to be construed as relieving the Contractor from the responsibility of correcting other defects in the Work as may become apparent during the Warranty Period.

APPENDIX "B"
TOTAL PERFORMANCE FORM

DATE OF TOTAL PERFORMANCE _____

Contractor's Certification

I hereby certify that the Work has been executed in accordance with the Contract Documents and in accordance with good construction practice. The undersigned hereby agrees that, notwithstanding the generality of the foregoing, the acceptance of the Work shall not prejudice any rights of the Owner or affect any liabilities of the undersigned Contractor pursuant to the provisions of the Contract.

Contractor	Date

Owner's Acceptance

I hereby accept the Work on behalf of the Owner. This acceptance is not to be construed as relieving the Contractor from the responsibility to correct other defects in the Works, whether latent or patent, as may become apparent within the Guarantee/Warranty Period. This acceptance is made without prejudice to the rights of the Owner or to the liabilities of the Contractor which may arise and/or continue after acceptance of the Work.

Owner	Date

END OF SECTION

Part 1 General

1.1 SECTION INCLUDES

.1 As-built, samples, and specifications.

.2 Product data, materials and finishes, and related information, including part numbers.

.3 Operation and maintenance data.

.4 Spare parts, special tools and maintenance materials.

.5 Warranties.

1.2 RELATED SECTIONS

.1 Section 01 77 00 - Closeout Procedures.

1.3 SUBMISSION

.1 Prepare instructions and data using personnel experienced in maintenance and operation of described products.

.2 Copy will be returned after final review, with Consultant's comments.

.3 Revise content of documents as required prior to final submittal.

.4 Two weeks prior to Substantial Performance of the Work, submit to the Construction Manager three final copies of operating and maintenance manuals in English.

.5 Ensure spare parts, maintenance materials and special tools provided are new, undamaged or defective, and of same quality and manufacture as products provided in Work.

.6 If requested, furnish evidence as to type, source and quality of products provided.

.7 Defective products will be rejected, regardless of previous inspections. Replace products at own expense.

.8 Pay costs of transportation.

1.4 FORMAT

.1 Organize data in the form of an instructional manual.

.2 Binders: vinyl, hard covered, 3 'D' ring, loose leaf 219 x 279 mm with spine and face pockets.

.3 When multiple binders are used, correlate data into related consistent groupings. Identify contents of each binder on spine.

.4 Cover: Identify each binder with type or printed title 'Project Record Documents'; list title of project and identify subject matter of contents.

.5 Arrange content by systems, process flow, under Section numbers and sequence of Table of Contents.

.6 Provide tabbed fly leaf for each separate product and system, with typed description of product and major component parts of equipment.

.7 Text: Manufacturer's printed data, or typewritten data.

.8 Drawings: provide with reinforced punched binder tab. Bind in with text; fold larger drawings to size of text pages.

1.5 CONTENTS - EACH VOLUME

.1 Table of Contents: provide title of project;

.1 date of submission; names,

.2 addresses, and telephone numbers of Consultant and Contractor with name of responsible parties;

.3 schedule of products and systems, indexed to content of volume.

.2 For each product or system:

.1 list names, addresses and telephone numbers of subcontractors and suppliers, including local source of supplies and replacement parts.

.3 Product Data: mark each sheet to clearly identify specific products and component parts, and data applicable to installation; delete inapplicable information.

.4 Drawings: supplement product data to illustrate relations of component parts of equipment and systems.

.5 Typewritten Text: as required to supplement product data. Provide logical sequence of instructions for each procedure, incorporating manufacturer's instructions

1.6 AS-BUILTS AND SAMPLES

.1 In addition to requirements in General Conditions, maintain at the site for Consultant and Owner one record copy (which are to be submitted and form part of the closeout manuals) of:

.1 Contract Drawings.

.2 Specifications.

.3 Addenda.

.4 Change Orders and other modifications to the Contract.

.5 Reviewed shop drawings, product data, and samples.

.6 Manufacturer's certificates.

.7 Site meeting minutes.

.8 Change orders.

1.7 RECORDING ACTUAL SITE CONDITIONS

.1 Record information on set of black line opaque drawings, and in copy of Project Manual.

.2 Contract Drawings and shop drawings: legibly mark each item to record actual construction, including:

.1 Field changes of dimension and detail.

.2 Changes made by change orders.

.3 Details not on original Contract Drawings.

.4 References to related shop drawings and modifications.

.3 Specifications: legibly mark each item to record actual construction, including:

.1 Manufacturer, trade name, and catalogue number of each product actually installed, particularly optional items and substitute items.

.2 Changes made by Addenda and change orders.

.4 Other Documents: maintain manufacturer's certifications, inspection certifications, field test records, required by individual specifications sections.

1.8 EQUIPMENT AND SYSTEMS

.1 Maintenance Requirements: include routine procedures and guide for trouble-shooting; disassembly, repair, and reassembly instructions; and alignment, adjusting, and checking instructions.

.2 Include manufacturer's printed operation and maintenance instructions.

.3 Provide original manufacturer's parts list, illustrations, assembly drawings, and diagrams required for maintenance.

.4 Provide list of original manufacturer's spare parts, current prices, and recommended quantities to be maintained in storage.

.5 Additional requirements: As specified in individual specification sections.

1.9 MATERIALS AND FINISHES

.1 Building Products, Applied Materials, and Finishes: include product data, with catalogue number, size, composition, and colour and texture designations. Provide information for re-ordering custom manufactured products.

.2 Instructions for cleaning agents and methods, precautions against detrimental agents and methods, and recommended schedule for cleaning and maintenance.

.3 Additional Requirements: as specified in individual specifications sections.

1.10 SPARE PARTS

.1 Provide spare parts, in quantities specified in individual specification sections.

.2 Provide items of same manufacture and quality as items in Work.

.3 Deliver to location as directed; place and store.

.4 Receive and catalogue all items. Submit inventory listing to Construction Manager. Include approved listings in Maintenance Manual.

.5 Obtain receipt for delivered products and submit prior to final payment.

1.11 SPECIAL TOOLS

.1 Provide special tools, in quantities specified in individual specification section.

.2 Provide items with tags identifying their associated function and equipment.

.3 Deliver to location as directed; place and store.

1.12 STORAGE, HANDLING AND PROTECTION

.1 Store spare parts, maintenance materials, and special tools in manner to prevent damage or deterioration.

.2 Store in original and undamaged condition with manufacturer's seal and labels intact.

.3 Remove and replace damaged products at own expense and to satisfaction of Consultant.

1.13 WARRANTIES

.1 Separate each warranty with index tab sheets keyed to Table of Contents listing.

.2 List subcontractor, supplier, and manufacturer, with name, address, and telephone number of responsible principal.

.3 Obtain warranties executed in duplicate by subcontractors, suppliers, and manufacturers, within ten days after completion of the applicable item of work.

.4 Except for items put into use with Owner's permission, leave date of beginning of time of warranty until the Date of Substantial Performance is determined.

.5 Verify that documents are in proper form, contain full information, and are notarized.

.6 Co-execute submittals when required.

.7 Retain warranties until time specified for submittal.

Part 2 Products

2.1 NOT USED

Part 3 Execution

3.1 NOT USED

END OF SECTION

Part 1 General

1.1 SECTION INCLUDES

.1 Materials and components for desks, seating and panel systems.

1.2 RELATED SECTIONS

.1 Section 01 33 00 - Submittal Procedures.

1.3 REFERENCES

.1 American National Standards Institute (ANSI).

.1 ANSI A208.1-99, Standard for Particleboard.

.2 American National Standards Institute (ANSI)/Business and International Furniture Manufacturers Association (BIFMA) International.

.1 ANSI/BIFMA X5.1-2002, American National Standard for Office Furnishings, General Purpose Office Chairs - Tests.

.2 ANSI/BIFMA X5.6-2010, American National Standard for Office Furnishings - Panel Systems.

.3 American Society for Testing and Materials International, (ASTM).

.1 ASTM C297-94(R1999), Standard Test Method for Flatwise Tensile Strength of Sandwich Connections.

.4 The Business and Institutional Furniture Manufacturer's Association.

.1 BIFMACMD-1-1997, BIFMA Chair Measuring Device.

.5 Canadian General Standards Board (CGSB).

.1 CAN/CGSB 44.227-2008, Freestanding Office Desk Products and Components.

.2 CAN/CGSB-44.232-2008, Task Chairs for Office Work with Visual Display Terminals.

.6 Canadian Standards Association (CSA International).

.1 CSA C22.2 No.9.0-96(R2011) General Requirements for Luminaires.

.2 CAN/CSA-C22.2 No.203-M91(R2010), Modular Wiring Systems for Office Furniture.

.7 Health Canada/Workplace Hazardous Materials Information System (WHMIS).

.1 Material Safety Data Sheets (MSDS).

.8 The Master Painters Institute (MPI).

.1 Architectural Painting Specification Manual - March 1998(R2002).

.9 Underwriters' Laboratories Canada (ULC).

.1 CAN/ULC-S102-1988(R2000), Standard Method of Test for Surfaces Burning Characteristics of Building Materials and Assemblies.

.10 Underwriters' Laboratories (UL).

.1 UL 1286 Edition 4-1999, Standard for Office Furnishings.

1.4 SUBMITTALS

.1 Submit product data in accordance with Section 01 33 00 - Submittal Procedures.

.2 Submit WHMIS MSDS - Material Safety Data Sheets in accordance with Section 02 61 33 - Hazardous Materials. WHMIS MSDS acceptable to Human Resource Development Canada - Labour.

.3 Supply part numbers of furniture to allow for replacement of worn or damaged furniture parts.

.4 Supply instructions detailing procedures for repairing or replacing worn furniture parts.

.5 Submit samples in accordance with Section 02 61 33 - Hazardous Materials.

.6 Submit 2 copies of each sample for Fabric, Laminate, Metal Finish.

1.5 WASTE MANAGEMENT AND DISPOSAL

.1 Separate waste materials for reuse and recycling in accordance with Section 01 74 19 - Construction/Demolition Waste Management And Disposal.

.2 Remove from site and dispose of packaging materials at appropriate recycling facilities.

.3 Collect and separate for disposal paper, plastic, polystyrene, corrugated cardboard, and packaging material in appropriate on-site bins for recycling in accordance with Waste Management Plan.

.4 Fold up metal banding, flatten and place in designated area for recycling.

1.6 WARRANTY

.1 Provide written assurance that replacement parts will be available for minimum of 10 years following discontinuation of product manufacture.

.2 Ensure warranties provide for repair rather than replacement.

Part 2 Products

2.1 SPECIFICATIONS

.1 Product has a life-time warranty.

.2 ANSI/BIFMA e3-2010 furniture sustainability standard.

.3 Products are manufactured in an ISO 14000 facility.

.4 Product is certified under GreenGuard, meeting indoor air quality standards.

.5 Product to meet CAN/CGSB 44.229-2008 for Interconnecting Panel Systems and Supported Components.

.6 For systems furniture data/specifications refer to attached Furniture, Fixtures and Equipment: Specifications.

Part 3 Execution

3.1 NOT USED

.1 Not used.

END OF SECTION

Project # 14E-12372-00
Date: November 21, 2014

Furniture, Fixtures, and Equipment: Specifications

Item

Item Code:	Office Furniture
Manufacturer:	Global Contract - Licence 2 (Standard of Acceptance)
Description:	**Desk:** L-shaped desk, each return to have half modesty panels & pedestals BBF. (provide locks on pedestals). *Overall size* 6'-6" x 6'-6" *Pulls:* RN-Round Nickel *Top:* D35460HP Designer White *Base:* 7949-38HP Asia Night *Edge Detail* 1" (PVC edge banding to match laminate) Provide grommet on each return **File Cabinet:** 9300 Series 3 Drawer Lateral File Fixed front, Locking Size: 36"W x 18"D x 40.5"H Finish: TU2 - Tungsten 2 **QTY: 2** **Table Top:** 36" diameter Finish: D35460HP Designer White (PVC edge banding to match laminate) **Table Base:** Cross base, size to suit top, 28" height Finish: 7949-38HP Asia Night (PVC edge banding to match laminate)

Picture:

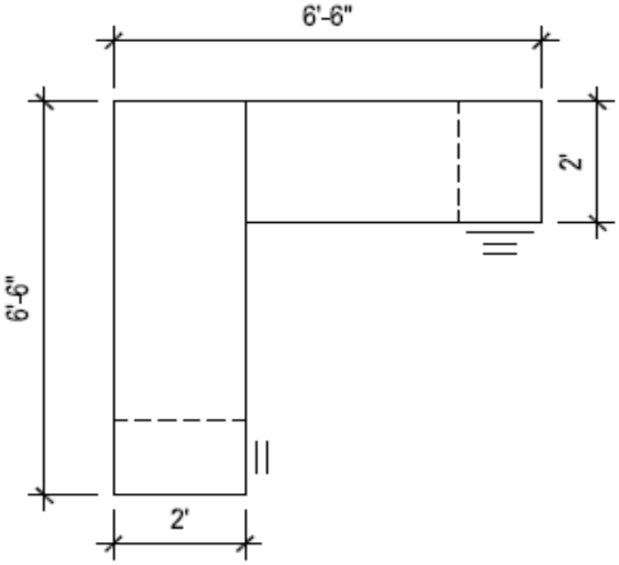

Location

Room Code	Room Name
	Office 109

*** Also refer to floor plans**

Furniture, Fixtures, and Equipment: Specifications

Item

Item Code:	Office Furniture
Manufacturer:	Global Contract - Licence 2 (Standard of Acceptance)
Description:	**Desk:** L-shaped desk, "P"shaped top w/half modesty panel & leg, return to have pedestak BBF(provide locks on pedestals). *Overall size* : 6'-0" x 7'-0" *Pulls:* RN-Round Nickel *Top:* D35460HP Designer White *Base* : 7949-38HP Asia Night *Edge Detail* 1" (PVC edge banding to match laminate) Provide grommet on return **File Cabinet:** 9300 Series 3 Drawer Lateral File Fixed front, Locking Size: 36"W x 18"D x 40.5"H Finish: TU2 - Tungsten 2 **QTY:1** **Bookcase:** Bookcase w/ 3adjustable shelves (36"W x 17"D x 54"Ht) Finish:7949-38HP Asia Night Edge Detail 1" (PVC edge banding to match laminate top)

Picture:

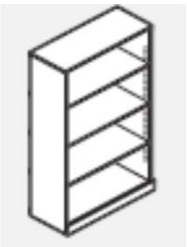

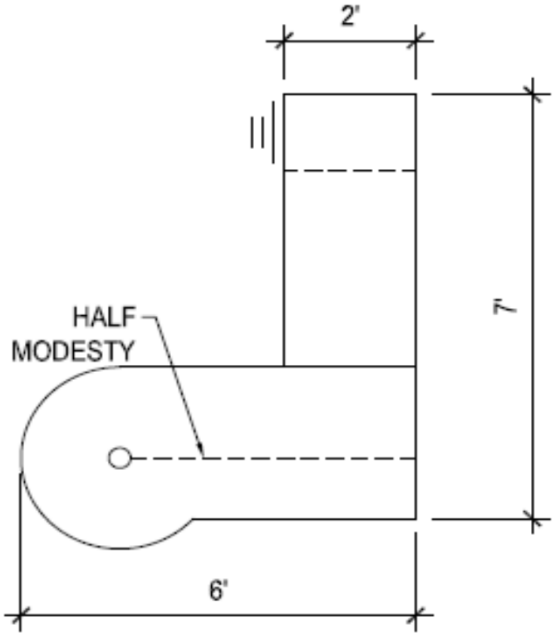

Location

Room Code	Room Name
	Office 110

*** Also refer to floor plans**

Furniture, Fixtures, and Equipment: Specifications

Item

Item Code:	Office Furniture
Manufacturer:	Global Contract - Licence 2 (Standard of Acceptance)
Description:	**Desk:** L-shaped desk, "P"shaped top w/half modesty panel & leg, return to have pedestal BBF(provide locks on pedestals). **Overall size**: 6'-6" x 6'-0" *Pulls:* RN-Round Nickel *Top:* D35460HP Designer White *Base:* 7949-38HP Asia Night *Edge Detail* 1" (PVC edge banding to match laminate) Provide grommet on return ***Hutch:*** w/aluminum glass(frosted) doors, Finish:7949-38HP Asia Night 72"length, 43.81"ht. Back panel to be: D35460HP Designer White **File Cabinet**: 9300 Series 4 Drawer Lateral File Fixed front, Locking Size: 36"W x 18"D x 54"H Finish: TU2 - Tungsten 2 **QTY:2** **File Cabinet:** 9300 Series 2 Drawer Lateral File Fixed front, Locking (note all locks to be keyed differently, typical) Size: 36"W x 18"D x 27.12"H Finish: TU2 - Tungsten 2 **QTY: 2**

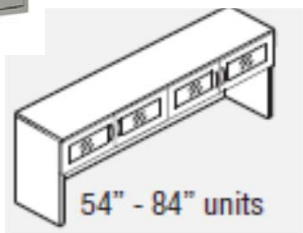

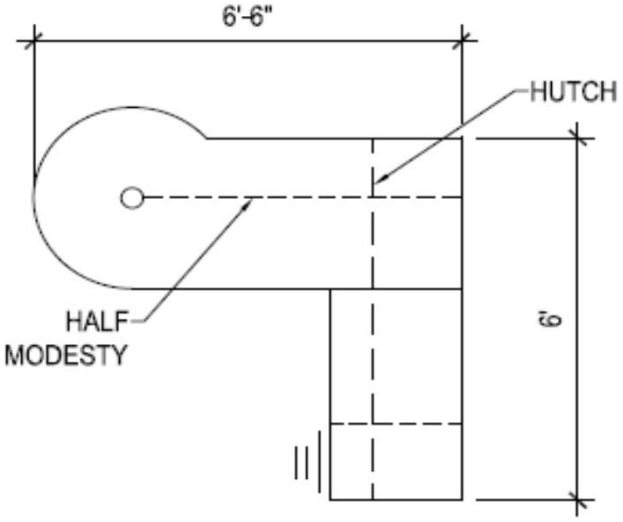

Location

Room Code	Room Name
	Office 113

*** Also refer to floor plans**

Project # 14E-12372-00
Date: November 21, 2014

Furniture, Fixtures, and Equipment: Specifications

Item

Item Code:	Office Furniture
Manufacturer:	Global Contract - Licence 2 (Standard of Acceptance)
Description:	**Desk:** L-shaped desk, each return to have half modesty panels & pedestals BBF. (provide locks on pedestals). Corner w/curved front. Provide grommet on each return *Overall size* 6'-6" x 6'-6" *Pulls* : RN-Round Nickel *Top:* D35460HP Designer White *Base* : 7949-38HP Asia Night *Edge Detail* 1" (PVC edge banding to match laminate) ***Hutch:*** w/aluminum glass(frosted) doors, Finish:7949-38HP Asia Night 78"length, 43.81"ht. Back panel to be: D35460HP Designer White **File Cabinet:** 9300 Series 3 Drawer Lateral File Fixed front, Locking Size: 36"W x 18"D x 40.5"H Finish: TU2 - Tungsten 2 **QTY: 1** **Table Top:** 36" diameter Finish: D35460HP Designer White (PVC edge banding to match laminate) **Table Base:** Cross base, size to suit top, 28" height Finish: 7949-38HP Asia Night (PVC edge banding to match laminate)

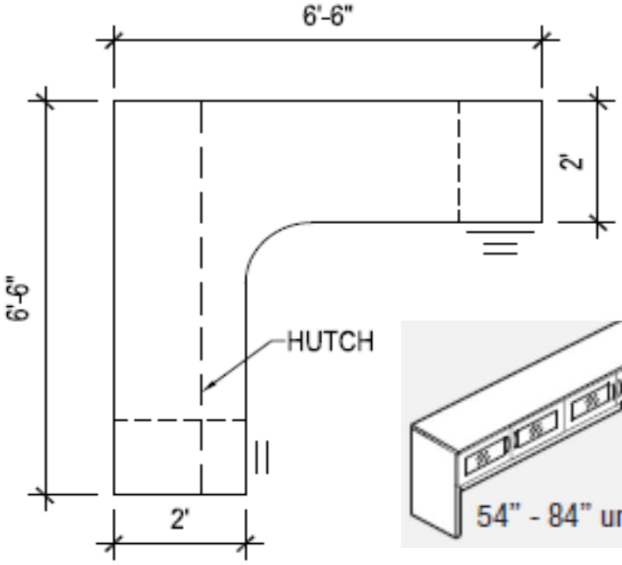

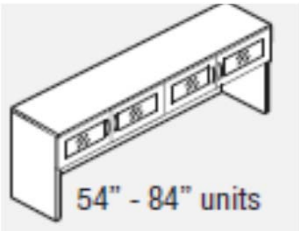

Location

Room Code	Room Name
	Office 120

*** Also refer to floor plans**

Item

Item Code:	Office Furniture
Manufacturer:	Global Contract - Licence 2 (Standard of Acceptance)
Description:	**Desk:** L-shaped desk, "P"shaped top w/half modesty panel & leg, return to have pedestal BBF(provide locks on pedestals). *Overall size* : 7'-6" x 7'-0" *Pulls:* RN-Round Nickel *Top* : D35460HP Designer White *Base:* 7949-38HP Asia Night *Edge Detail* 1" (PVC edge banding to match laminate) Provide grommet on return ***Hutch:*** w/aluminum glass(frosted) doors, Finish:7949-38HP Asia Night 78"length, 43.81"ht. Back panel to be: D35460HP Designer White **Credenza:** *Overall size:4'-6" x 1'-8"D x 30"ht* *Top:* D35460HP Designer White*(PVC edge banding to match laminate)* *Base:* 7949-38HP Asia Night (PVC edge banding to match laminate) **Table Top:** 36" diameter Finish: D35460HP Designer White (PVC edge banding to match laminate) **Table Base:** Cross base, size to suit top, 28" height Finish: 7949-38HP Asia Night (PVC edge banding to match laminate)

Picture:

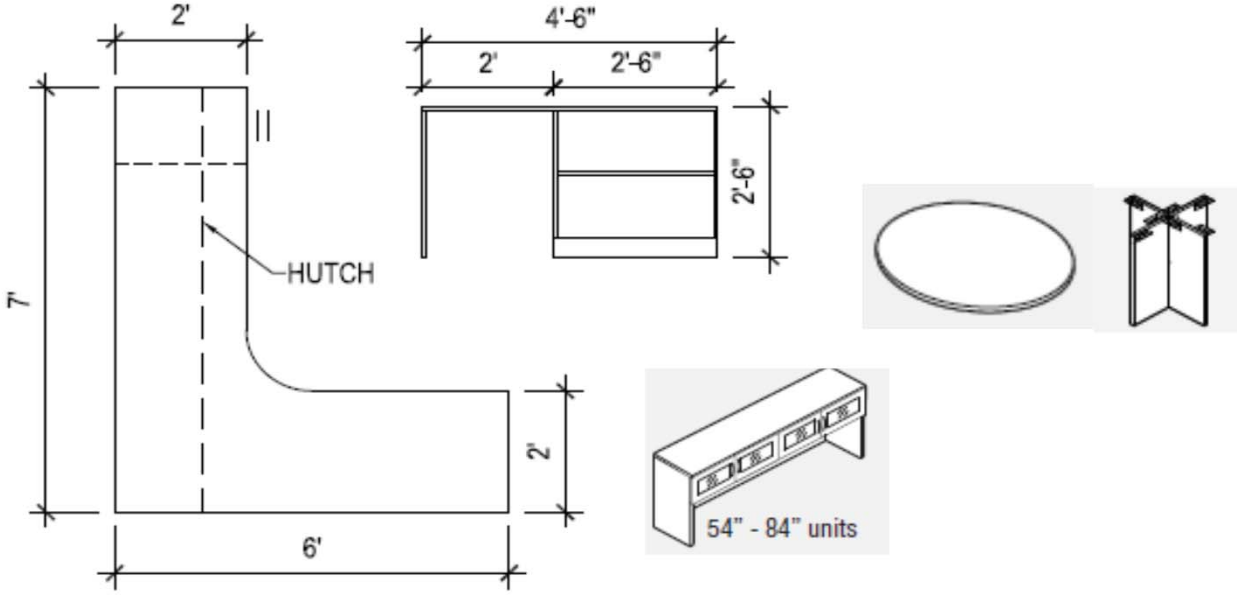

Location

Room Code	Room Name
	Office 211

*** Also refer to floor plans**

Item

Item Code:	Office Furniture
Manufacturer:	Global Contract - Licence 2 (Standard of Acceptance)
Description:	**Desk:** L-shaped desk, w/full modesty panel front, return to have pedestal BBF(provide locks on pedestals) & half modesty panel *Overall size* : 5'-6" x 6'-0" *Pulls:* RN-Round Nickel *Top:* D35460HP Designer White *Base* : 7949-38HP Asia Night *Edge Detail* 1" (PVC edge banding to match laminate) Provide grommet on return ***Hutch* :** w/aluminum glass(frosted) doors, Finish:7949-38HP Asia Night 72"length, 43.81"ht. **Desk:** L-shaped desk, return to have pedestal BBF(provide locks on pedestals) & half modesty panel Overall size: 5'-6" x 5'-6" Pulls: RN-Round Nickel Top: D35460HP Designer White Base: 7949-38HP Asia Night Edge Detail 1" (PVC edge banding to match laminate) Provide grommet on return ***Hutch:*** w/aluminum glass(frosted) doors, Finish:7949-38HP Asia Night 66"length, 43.81"ht.

Picture:

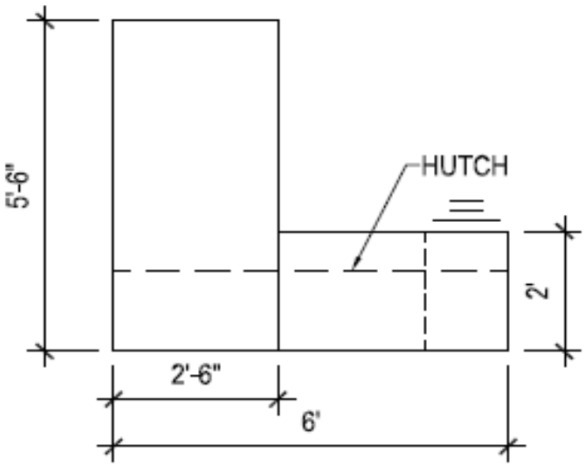

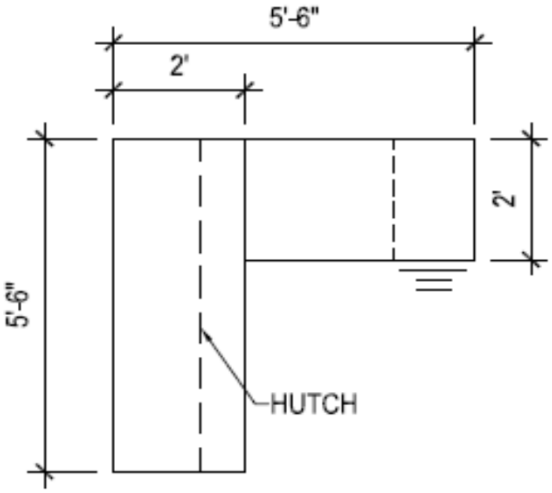

Location

Room Code	Room Name
	Office 212

*** Also refer to floor plans**

Project # 14E-12372-00
Date: November 21, 2014

Furniture, Fixtures, and Equipment: Specifications

Item

Item Code:	Office Furniture
Manufacturer:	Global Contract - Licence 2 (Standard of Acceptance)
Description:	**Table Top**: 36" diameter Finish: D35460HP Designer White (PVC edge banding to match laminate) **Table Base:** Cross base, size to suit top, 28" height Finish: 7949-38HP Asia Night (PVC edge banding to match laminate)

Picture:

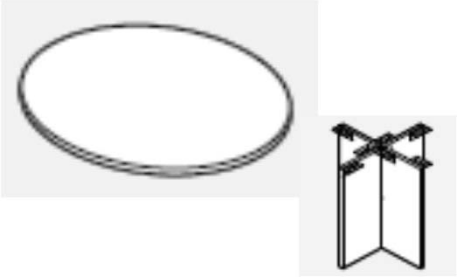

Location

Room Code	Room Name
	Office 214

*** Also refer to floor plans**

Item

Item Code:	Office Furniture
Manufacturer:	Global Contract - Licence 2 (Standard of Acceptance)
Description:	**Desk:** L-shaped desk, each return to have half modesty panels & *pedestals BBF* . (provide locks on pedestals). *Overall size* 6'-0" x 6'-0" *Pulls:* RN-Round Nickel *Top:* D35460HP Designer White *Base:* 7949-38HP Asia Night *Edge Detail* 1" (PVC edge banding to match laminate) Provide grommet on each return **File Cabinet:** 9300 Series 3 Drawer Lateral File Fixed front, Locking Size: 36"W x 18"D x 40.5"H Finish: TU2 - Tungsten 2 **QTY:1** **Bookcase:** Bookcase w/ 3adjustable shelves (36"W x 12"D x 54"Ht) Finish:7949-38HP Asia Night Edge Detail 1" (PVC edge banding to match laminate top)

Picture:

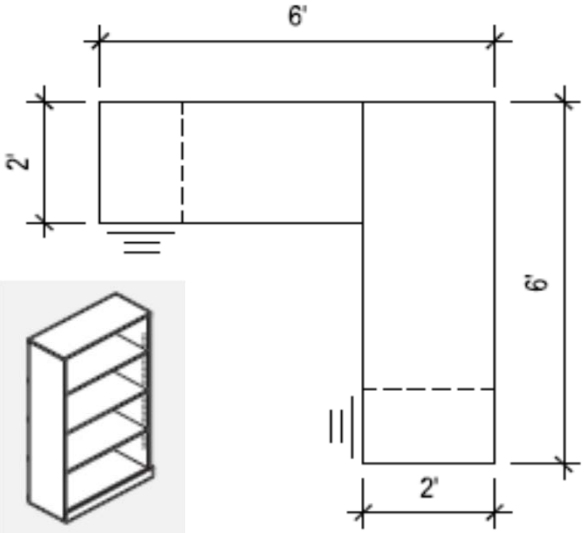

Location

Room Code	Room Name
	Office 216

*** Also refer to floor plans**

Item

Item Code:	Office Furniture
Manufacturer:	Global Contract - Licence 2 (Standard of Acceptance)
Description:	**Desk:** L-shaped desk, each return to have half modesty panels & pedestals BBF. (provide locks on pedestals). Provide grommet on each return *Overall size* 6'-6" x 6'-6" *Pulls:* RN-Round Nickel *Top* : D35460HP Designer White *Base:* 7949-38HP Asia Night *Edge Detail* 1" (PVC edge banding to match laminate) ***Hutch:*** w/aluminum glass(frosted) doors, Finish:7949-38HP Asia Night 78"length, 43.81"ht. Back panel to be: D35460HP Designer White **File Cabinet:** 9300 Series 3 Drawer Lateral File Fixed front, Locking Size: 36"W x 18"D x 40.5"H Finish: TU2 - Tungsten 2 **QTY:1** **Bookcase:** Bookcase w/ 3adjustable shelves (36"W x 17"D x 54"Ht) Finish:7949-38HP Asia Night Edge Detail 1" (PVC edge banding to match laminate top)

Picture:

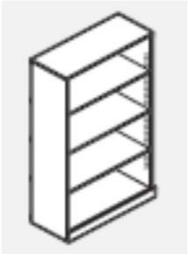

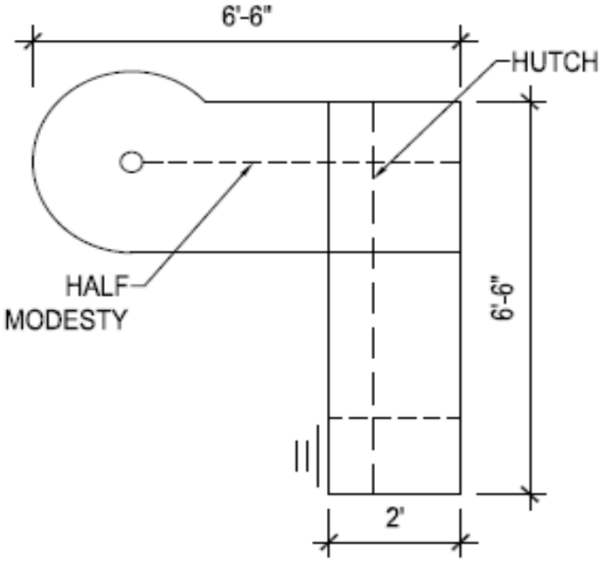

Location

Room Code	Room Name
	Office 219

*** Also refer to floor plans**

Item

Item Code:	Office Furniture
Manufacturer:	Global Contract - Licence 2 (Standard of Acceptance)
Description:	**Desk:** L-shaped desk, each return to have half modesty panels & pedestals BBF. (provide locks on pedestals). Provide grommet on each return *Overall size* 6'-6" x 6'-6" *Pulls:* RN-Round Nickel *Top:* D35460HP Designer White *Base:* 7949-38HP Asia Night *Edge Detail* 1" (3mm PVC edge banding to match laminate) ***Hutch:*** w/aluminum glass(frosted) doors, Finish:7949-38HP Asia Night 72"length, 43.81"ht. Back panel to be: D35460HP Designer White **File Cabinet**: 9300 Series 3 Drawer Lateral File Fixed front, Locking Size: 36"W x 18"D x 40.5"H Finish: TU2 - Tungsten 2 **QTY: 1** **Table Top:** 36" diameter Finish: D35460HP Designer White **Table Base:** Cross base, size to suit top, 28" height Finish: 7949-38HP Asia Night

Picture:

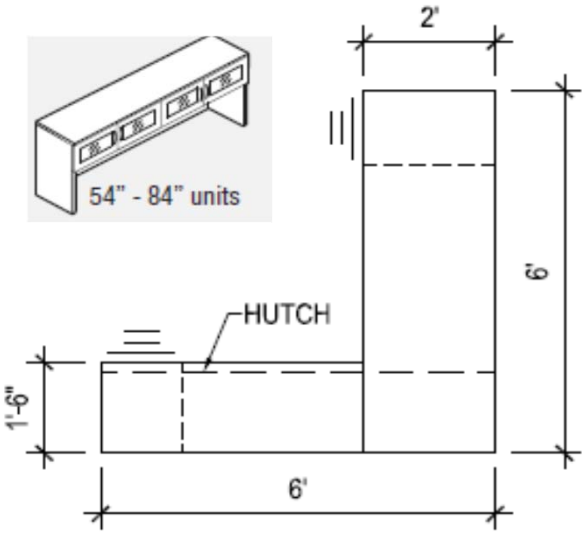

Location

Room Code	Room Name
	Office 220

*** Also refer to floor plans**

Project # 14E-12372-00
Date: November 21, 2014

Furniture, Fixtures, and Equipment: Specifications

Item

Item Code:	Office Furniture
Manufacturer:	Global Contract - Licence 2 (Standard of Acceptance)
Description:	**Desk:** L-shaped desk, each return to have half modesty panels & pedestals BBF. (provide locks on pedestals). Provide grommet on each return *Overall size* 6'-6" x 6'-6" *Pulls:* RN-Round Nickel *Top:* D35460HP Designer White *Base:* 7949-38HP Asia Night *Edge Detail* 1" (PVC edge banding to match laminate) ***Hutch:*** w/aluminum glass(frosted) doors, Finish:7949-38HP Asia Night 78"length, 43.81"ht. Back panel to be: D35460HP Designer White **File Cabinet:** 9300 Series 3 Drawer Lateral File Fixed front, Locking Size: 36"W x 18"D x 40.5"H Finish: TU2 - Tungsten 2 **QTY:** 1

Picture:

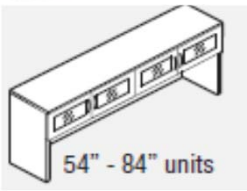

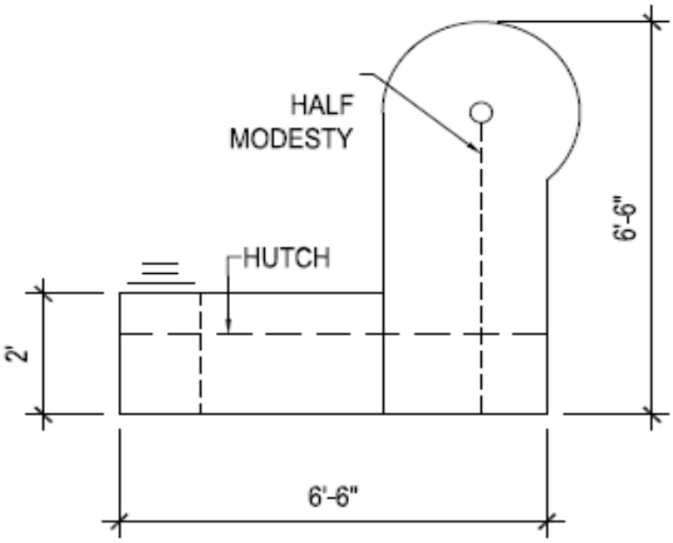

Location

Room Code	Room Name
	Office 222

*** Also refer to floor plans**

Item

Item Code:	Office Furniture
Manufacturer:	Global Contract - Licence 2 (Standard of Acceptance)
Description:	**Desk:** L-shaped desk, each return to have half modesty panels & pedestals BBF. (provide locks on pedestals). Corner w/curved front. *Overall size* 6'-6" x 6'-6" *Pulls:* RN-Round Nickel *Top:* D35460HP Designer White *Base:* 7949-38HP Asia Night *Edge Detail* 1" (PVC edge banding to match laminate) Provide grommet on each return ***Hutch:*** w/aluminum glass(frosted) doors, Finish:7949-38HP Asia Night 78"length, 43.81"ht. Back panel to be: D35460HP Designer White **File Cabinet:** 9300 Series 3 Drawer Lateral File Fixed front, Locking Size: 36"W x 18"D x 40.5"H Finish: TU2 - Tungsten 2 **QTY: 1** **Table Top:** 36" square top Finish: D35460HP Designer White (PVC edge banding to match laminate) **Table Base:** Cross base, size to suit top, 28" height Finish: 7949-38HP Asia Night (PVC edge banding to match laminate)

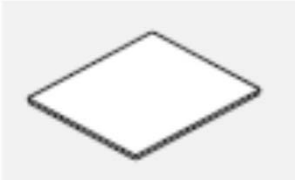

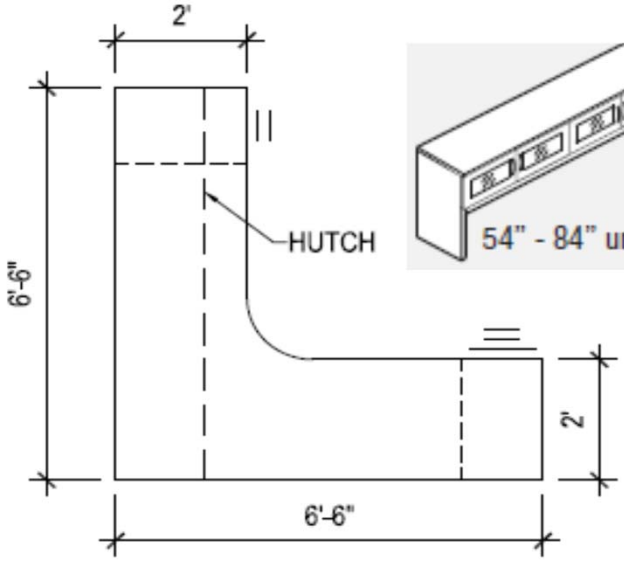

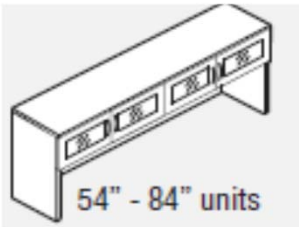

Location

Room Code	Room Name
	Office 310

*** Also refer to floor plans**

Item

Item Code:	Office Furniture
Manufacturer:	Global Contract - Licence 2 (Standard of Acceptance)
Description:	**Desk:** L-shaped desk, each return to have half modesty panels & pedestals BBF. (provide locks on pedestals). *Provide grommet* on each return *Overall size* 6'-6" x 6'-6" *Pulls:* RN-Round Nickel *Top:* D35460HP Designer White *Base:* 7949-38HP Asia Night *Edge Detail* 1" (3mm PVC edge banding to match laminate) ***Hutch:*** w/aluminum glass(frosted) doors, Finish:7949-38HP Asia Night 78"length, 43.81"ht. Back panel to be: D35460HP Designer White **File Cabinet:** 9300 Series 3 Drawer Lateral File Fixed front, Locking Size: 36"W x 18"D x 40.5"H Finish: TU2 - Tungsten 2 **Table Top:** 36" diameter Finish: D35460HP Designer White (PVC edge banding to match laminate) **Table Base:** Cross base, size to suit top, 28" height Finish: 7949-38HP Asia Night (PVC edge banding to match laminate)

Picture:

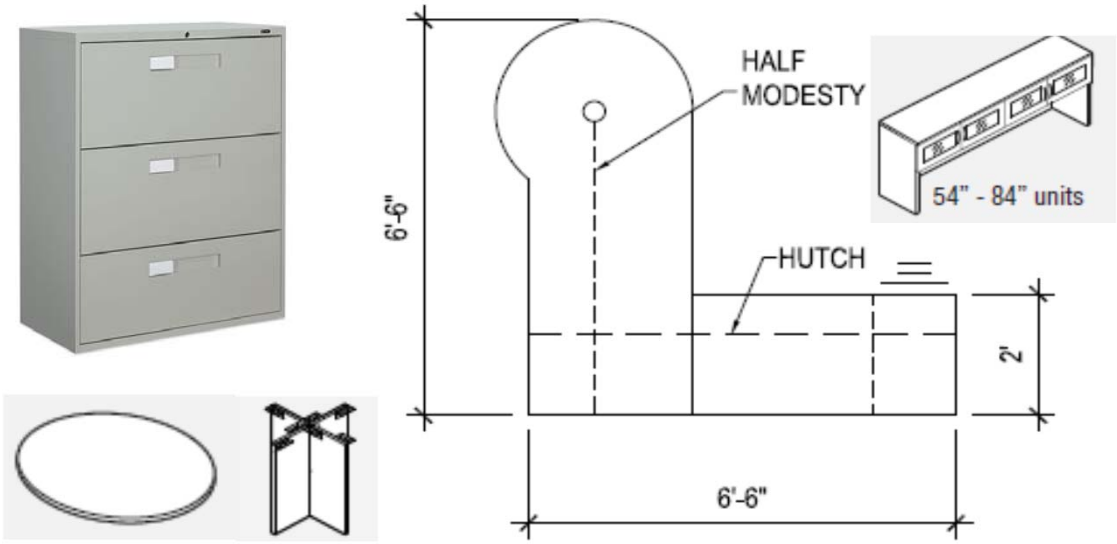

Location

Room Code	Room Name
	Office 313

*** Also refer to floor plans**

Item

Item Code:	Office Furniture
Manufacturer:	Global Contract - Licence 2 (Standard of Acceptance)
Description:	**Desk:** L-shaped desk, each return to have half modesty panels & pedestals BBF. (provide locks on pedestals). Provide grommet on each return *Overall size* 6'-6" x 6'-6" *Pulls* : RN-Round Nickel *Top:* D35460HP Designer White *Base:* 7949-38HP Asia Night *Edge Detail* 1" (3mm PVC edge banding to match laminate) ***Hutch:*** w/aluminum glass(frosted) doors, Finish:7949-38HP Asia Night 78"length, 43.81"ht. Back panel to be: D35460HP Designer White **File Cabinet:** 9300 Series 3 Drawer Lateral File Fixed front, Locking Size: 36"W x 18"D x 40.5"H Finish: TU2 - Tungsten 2 **QTY:1**

Picture:

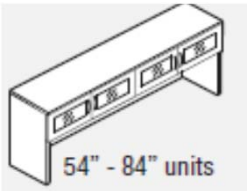

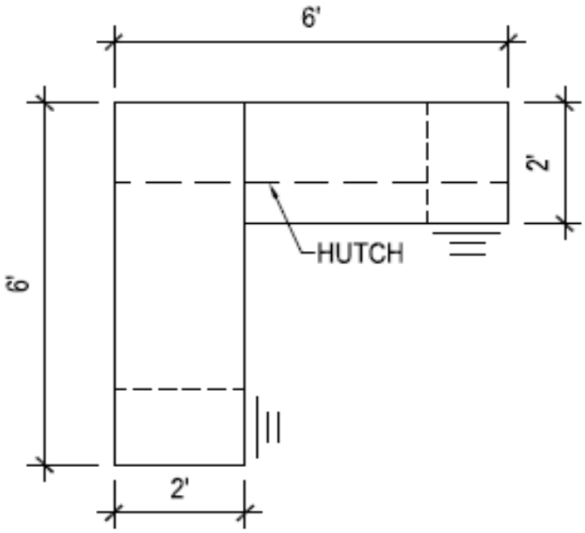

Location

Room Code	Room Name
	Office 319

*** Also refer to floor plans**

Item

Item Code:	Office Furniture
Manufacturer:	Global Contract - Licence 2 (Standard of Acceptance)
Description:	**Desk**: L-shaped desk, each return to have half modesty panels & pedestals BBF. (provide locks on pedestals). Corner w/curved front. Provide grommet on each return *Overall size* 6'-6" x 6'-6" *Pulls:* RN-Round Nickel *Top:* D35460HP Designer White *Base:* 7949-38HP Asia Night *Edge Detail* 1" (PVC edge banding to match laminate) ***Hutch:*** w/aluminum glass(frosted) doors, Finish:7949-38HP Asia Night 72"length, 43.81"ht. Back panel to be: D35460HP Designer White **File Cabinet:** 9300 Series 2 Drawer Lateral File Fixed front, Locking Size: 36"W x 18"D x 27.12"H Finish: TU2 - Tungsten 2 **QTY:1**

Picture:

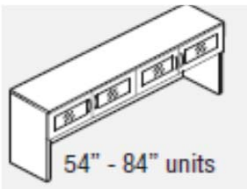

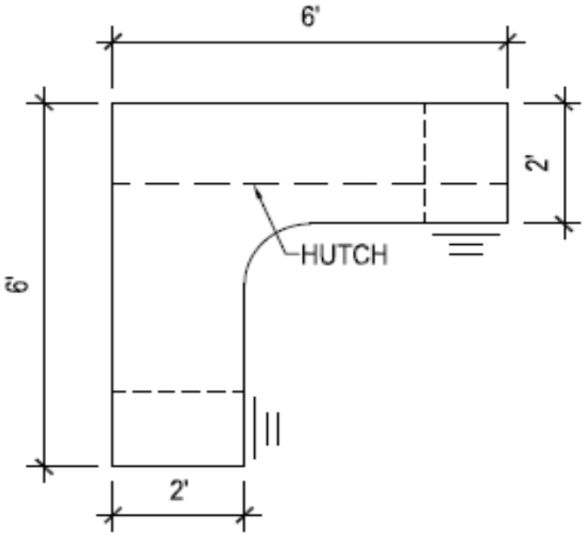

Location

Room Code	Room Name
	Office 321

*** Also refer to floor plans**

Item

Item Code:	Office Furniture
Manufacturer:	Global Contract - Licence 2 (Standard of Acceptance)
Description:	**Desk:** L-shaped desk, each return to have half modesty panels & pedestals BBF. (provide locks on pedestals). *Overall size* 6'-6" x 6'-6" *Pulls:* RN-Round Nickel *Top:* D35460HP Designer White *Base:* 7949-38HP Asia Night *Edge Detail* 1" (3mm PVC edge banding to match laminate) Provide grommet on each return **File Cabinet:** 9300 Series 3 Drawer Lateral File Fixed front, Locking Size: 36"W x 18"D x 40.5"H Finish: TU2 - Tungsten 2 **Table Top:** 36" diameter Finish: D35460HP Designer White **Table Base:** Cross base, size to suit top, 28" height Finish: 7949-38HP Asia Night

Picture:

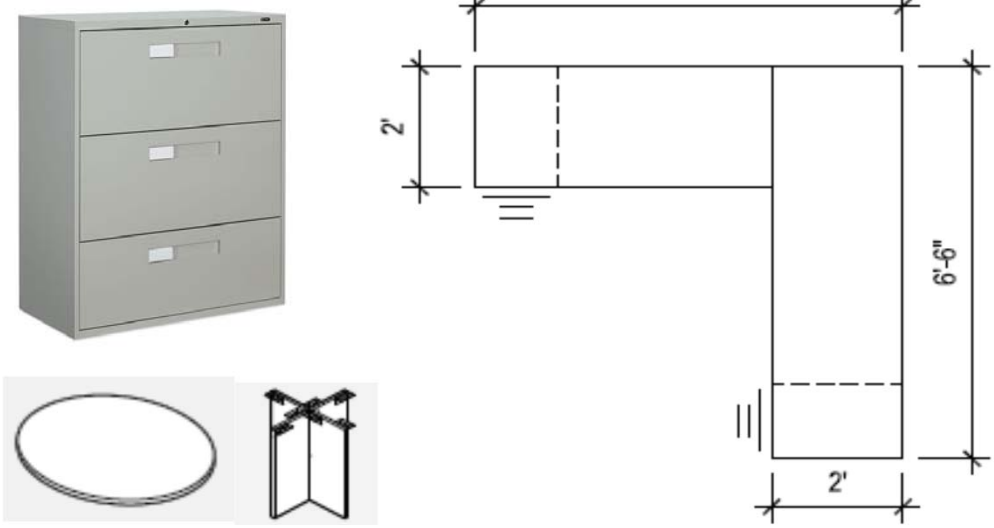

Location

Room Code	Room Name
	Office 322

*** Also refer to floor plans**

Furniture, Fixtures, and Equipment: Specifications

Item

Item Code:	Office Furniture - Option 1
Manufacturer:	Steelcase - Leap Chair (Standard of Acceptance)
Description:	**Chair:** Fabric: Link, Classics Collection, Price Group 1, Col: Black 5A27 Arm Options: Fully adjustable arms Frame Finish: Black 6205 Standard Upholstery **Overall Dimensions:** Depth: 21.75" to 24.75" Width: 27" Seat Height: 15.5" to 20.5" **Leap Chair Features:** Adjustable seat depth, adjustable seat height, adjustable lumbar, lower back firmness, upper back force, variable back stop, adjustable arms

Picture:

Location

Room Code	Quantity

NOTE: Provide price for each option of chair. Only one option will be selected for a total of 45 chairs

TOTAL Quantity	45

*** Also refer to floor plans**

Project # 14E-12372-00
Date: November 21, 2014

Furniture, Fixtures, and Equipment: Specifications

Item

Item Code:	Office Furniture - Option 2
Manufacturer:	Steelcase - Amia Chair (Standard of Acceptance)
Description:	**Chair:** Fabric: Link, Classics Collection, Price Group 1, Col: Black 5A27 Arm Options: Fully adjustable arms Frame Finish: Black 6205 Standard Upholstery **Seat Dimensions:** Depth: 15.5" to 18.5" Seat Width: 19.25" Seat Height: 16" to 21" **Amia Chair Features:** Live, lumbar height, live lumbar technology, height/depth/width & pivot arms, back lock, adjustable seat height, adjustable back tension, adjustable seat depth

Picture:

Location

Room Code	Quantity
NOTE: Provide price for each option of chair. Only one option will be selected for a total of 45 chairs	
TOTAL Quantity	45

*** Also refer to floor plans**

Project # 14E-12372-00
Date: November 21, 2014

Furniture, Fixtures, and Equipment: Specifications

Item

Item Code:	Office Furniture
Manufacturer:	Steelcase - Leap Chair (Standard of Acceptance)
Description:	**Chair:** Fabric: Black Mesh Back Arm Options: Fully adjustable arms Frame Finish: Black 6205 Standard Upholstery **Overall Dimensions:** Depth: 21.75" to 24.75" Width: 27" Seat Height: 15.5" to 20.5"

Picture:

IMAGE NOT AVAILABLE

Location

Room Code	Quantity
TOTAL Quantity	1

*** Also refer to floor plans**

Item

Item Code:	Keyboard Tray
Manufacturer:	Global Contract (Standard of Acceptance)
Description:	GAKSP0202 Soft touch keyboard mechanism, lift-n-lock keyboard

Picture:

Location

Room Code	Quantity
TOTAL Quantity	8

*** Also refer to floor plans**

Project # 14E-12372-00
Date: November 21, 2014

Furniture, Fixtures, and Equipment: Specifications

Item

Item Code:	Keyboard Tray
Manufacturer:	Global Contract (Standard of Acceptance)
Description:	Model APOKL28 28" wide wood laminate pull-out keyboard tray. 3mm PVC edging al the way around the platform. (wide enough to accommodate keybaord and mouse) 1" thickness. Finish: Balck

Picture:

IMAGE NOT AVAILABLE

Location

Room Code	Quantity
TOTAL Quantity	2

*** Also refer to floor plans**

Project # 14E-12372-00
Date: November 21, 2014

Furniture, Fixtures, and Equipment: Specifications

Item

Item Code:	Keyboard Tray
Manufacturer:	Steelcase (Standard of Acceptance)
Description:	1810EF - Radius Keyboard platform Finish: Black SS20 - Stella Mechanism adjustable keyboard support mechanism.

Picture:

IMAGE NOT AVAILABLE

Location

Room Code	Quantity
TOTAL Quantity	2

*** Also refer to floor plans**

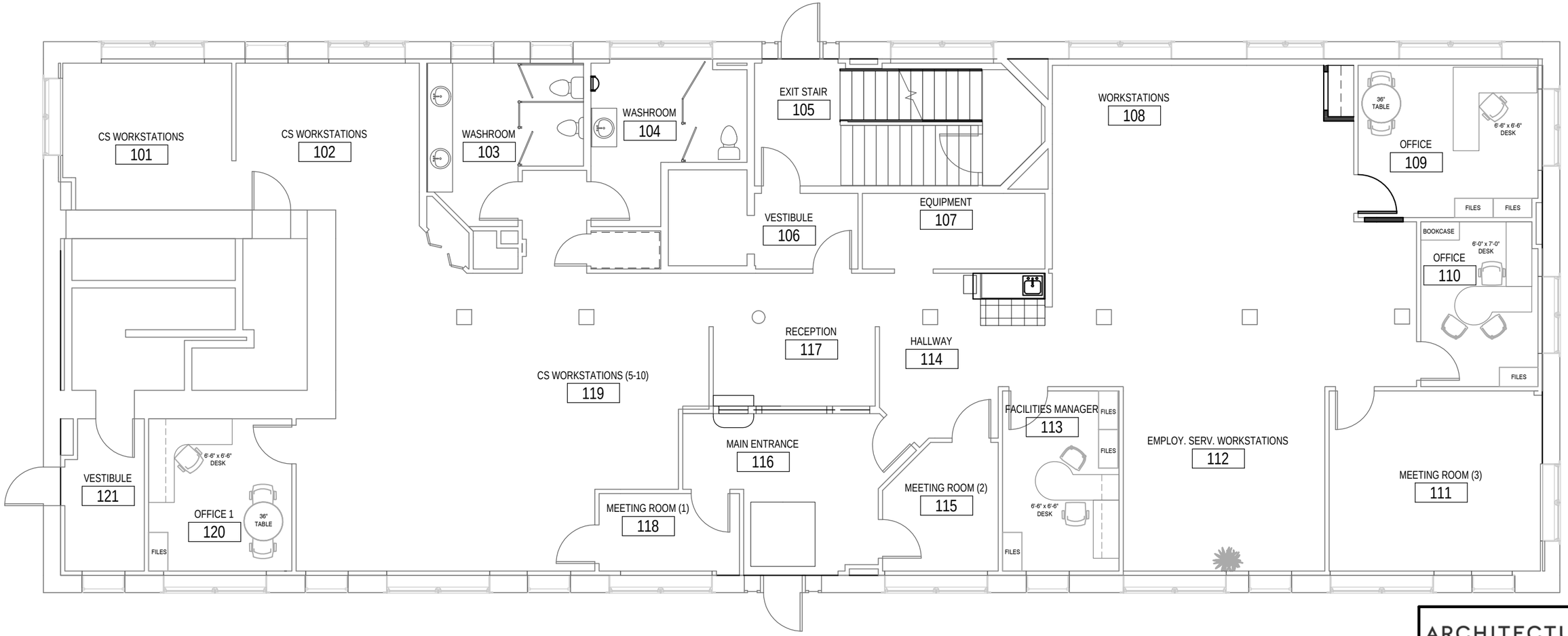

1 ASK - 1

MAIN FLOOR OFFICE FURNITURE

SCALE: 1/8" = 1'-0"

GENERAL NOTES:

1. THESE DRAWINGS ARE PROVIDED FOR FURNITURE SUPPLIERS GENERAL INFORMATION, AND SUPPLIER IS TO CONFIRM ALL DIMENSIONS/MEASUREMENTS ON SITE PRIOR TO ORDERING.

2. INSTALLATION OF FURNITURE TO BE COORDINATED WITH GENERAL CONTRACTOR ON SITE AND OWNER. REFER TO PHASING PLANS.

ARCHITECTS ASSOCIATION 14-10 CERTIFICATE of PRACTICE David Lopes Architecture49 Inc. AAPEI OF PRINCE EDWARD ISLAND

ARCHITECTURE 49
1-410 MOUNT EDWARD RD.
CHARLOTTETOWN, PE C1E 2A1
PHONE 1.902.367.4646 I WWW.ARCHITECTURE49.COM

FOR INFORMATION ONLY

Drawn: RM	Scale: 1/8" = 1'-0"
Checked: Checker	Approved: Approver
Date: NOVEMBER 21, 2014	
Client: WCB	
Project: WCB OFFICE INTERIOR RENOVATION	
City: CHARLOTTETOWN	Province: PE
Title: MAIN FLOOR OFFICE FURNITURE PLAN	
Commission No.:	-
Project No.:	14E-12372-00
Contract No.:	-
DWG No.:	ASK - 1

LEDGER - 11" x 17"

ALL DRAWINGS AND COPIES THERE OF ARE INSTRUMENTS OF SERVICE AND SUCH REMAIN THE PROPERTY OF NORTH 46 ARCHITECTURE INC. THEY ARE TO BE USED ONLY WITH RESPECT TO THIS PROJECT. WITH THE EXCEPTION OF ONE COMPLETE SET FOR EACH PARTY TO THE CONTRACT, ALL COPIES ARE TO BE RETURNED OR SUITABLY ACCOUNTED FOR TO THE ARCHITECT UPON COMPLETION OF THE WORK.

C:\Users\rebecca.muttart\Documents\WCB Central_2014 03 17_rebecca.muttart.rvt

11/20/2014 1:27:18 PM

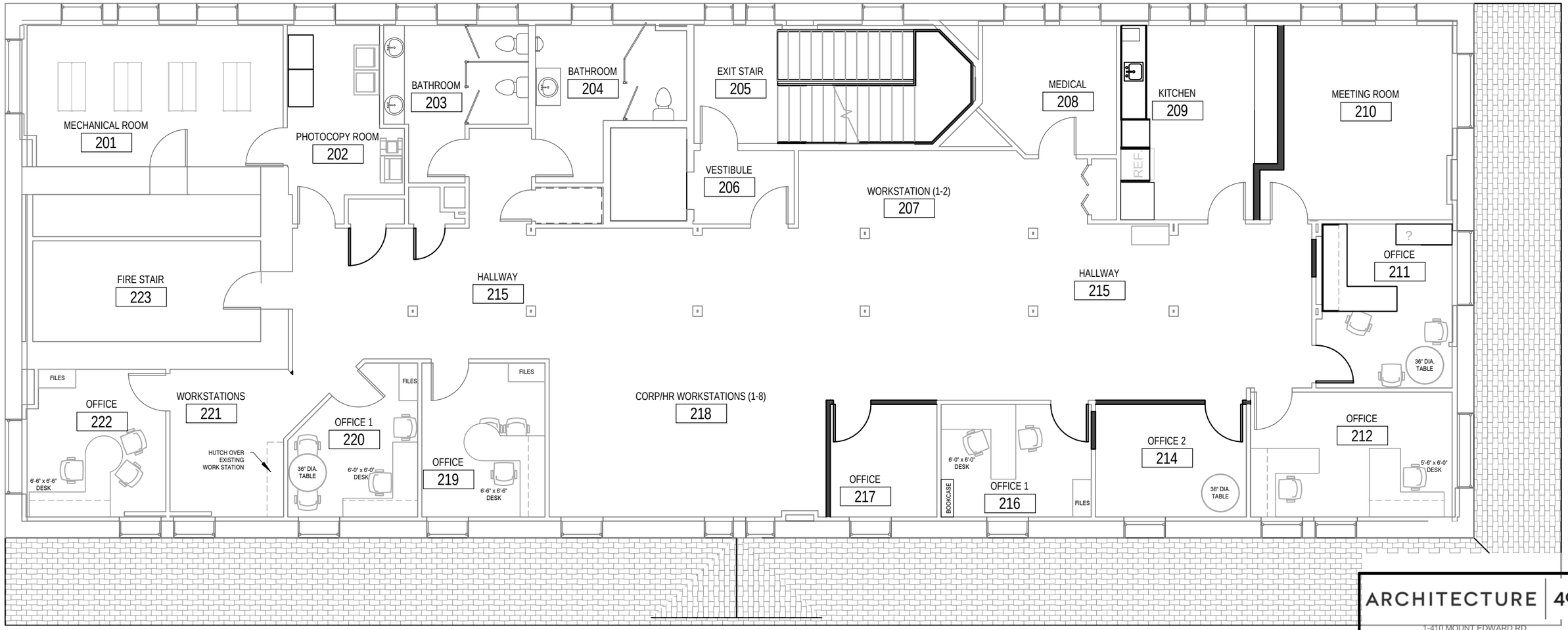

1
ASK - 2

SECOND FLOOR OFFICE FURNITURE

SCALE: 1/8" = 1'-0"

ARCHITECTS ASSOCIATION 14-10 CERTIFICATE of PRACTICE David Lopes Architecture49 Inc. AAPEI OF PRINCE EDWARD ISLAND

ARCHITECTURE 49
1-410 MOUNT EDWARD RD.
CHARLOTTETOWN, PE C1E 2A1
PHONE 1.902.367.4646 I WWW.ARCHITECTURE49.COM

FOR INFORMATION ONLY

Drawn: Author	Scale: 1/8" = 1'-0"
Checked: Checker	Approved: Approver
Date: NOVEMBER 21, 2014	

Client: WCB

Project: WCB OFFICE INTERIOR RENOVATION

City: CHARLOTTETOWN Province: PE

Title: SECOND FLOOR OFFICE FURNTIURE PLAN

Commission No.: -

Project No.: 14E-12372-00

Contract No.: -

DWG No.: **ASK - 2**

LEDGER - 11" x 17"

ALL DRAWINGS AND COPIES THERE OF ARE INSTRUMENTS OF SERVICE AND SUCH REMAIN THE PROPERTY OF NORTH 46 ARCHITECTURE INC. THEY ARE TO BE USED ONLY WITH RESPECT TO THIS PROJECT. WITH THE EXCEPTION OF ONE COMPLETE SET FOR EACH PARTY TO THE CONTRACT, ALL COPIES ARE TO BE RETURNED OR SUITABLY ACCOUNTED FOR TO THE ARCHITECT UPON COMPLETION OF THE WORK.

C:\Users\rebecca.muttart\Documents\WCB Central_2014 03 17_rebecca.muttart.rvt

11/20/2014 1:27:19 PM

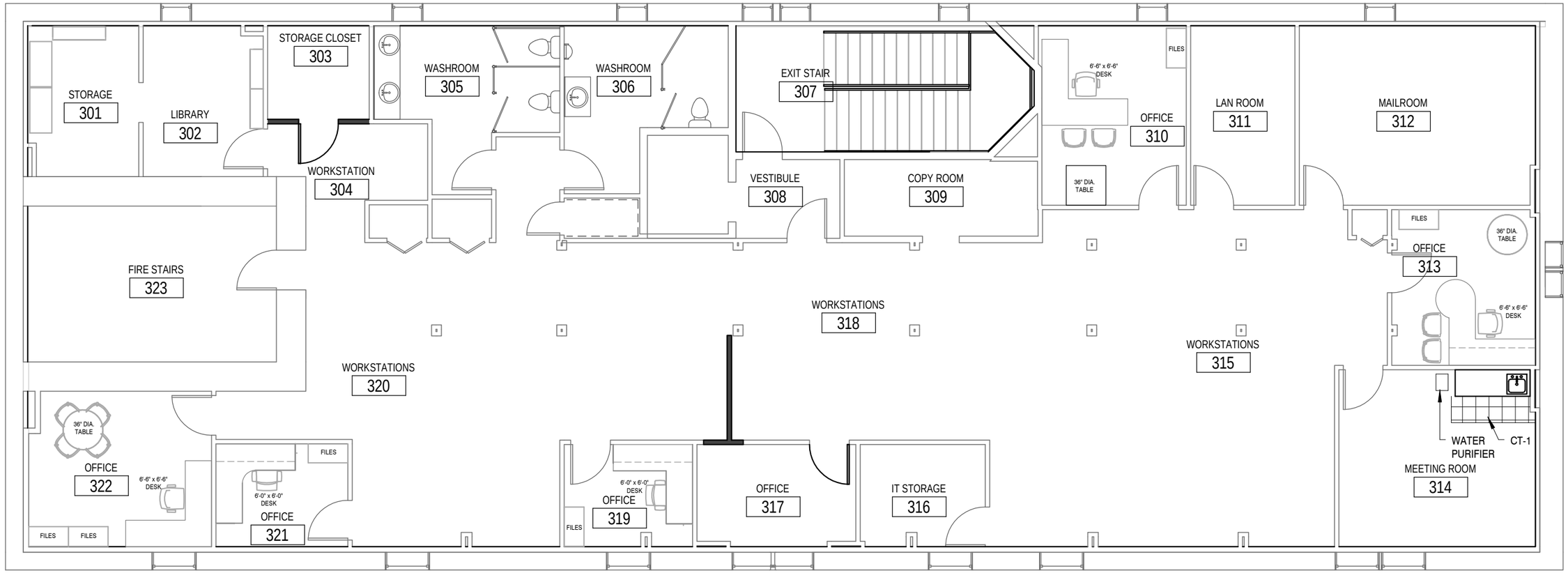

1
ASK - 3

THIRD FLOOR OFFICE FURNITURE

SCALE: 1/8" = 1'-0"

ARCHITECTS ASSOCIATION 14-10 CERTIFICATE of PRACTICE David Lopes Architecture49 Inc. AAPEI OF PRINCE EDWARD ISLAND

ARCHITECTURE 49

1-410 MOUNT EDWARD RD.
CHARLOTTETOWN, PE C1E 2A1
PHONE 1.902.367.4646 I WWW.ARCHITECTURE49.COM

FOR INFORMATION ONLY

Drawn:	Author	Scale:	1/8" = 1'-0"
Checked:	Checker	Approved:	Approver

Date: NOVEMBER 21, 2014

Client: WCB

Project: WCB OFFICE INTERIOR RENOVATION

City: CHARLOTTETOWN Province: PE

Title: THIRD FLOOR OFFICE FURNITURE PLAN

Commission No.: -

Project No.: 14E-12372-00

Contract No.: -

DWG No.: **ASK - 3**

LEDGER - 11" x 17"

ALL DRAWINGS AND COPIES THERE OF ARE INSTRUMENTS OF SERVICE AND SUCH REMAIN THE PROPERTY OF NORTH 46 ARCHITECTURE INC. THEY ARE TO BE USED ONLY WITH RESPECT TO THIS PROJECT. WITH THE EXCEPTION OF ONE COMPLETE SET FOR EACH PARTY TO THE CONTRACT, ALL COPIES ARE TO BE RETURNED OR SUITABLY ACCOUNTED FOR TO THE ARCHITECT UPON COMPLETION OF THE WORK.

C:\Users\rebecca.muttart\Documents\WCB Central_2014 03 17_rebecca.muttart.rvt

11/20/2014 1:27:20 PM