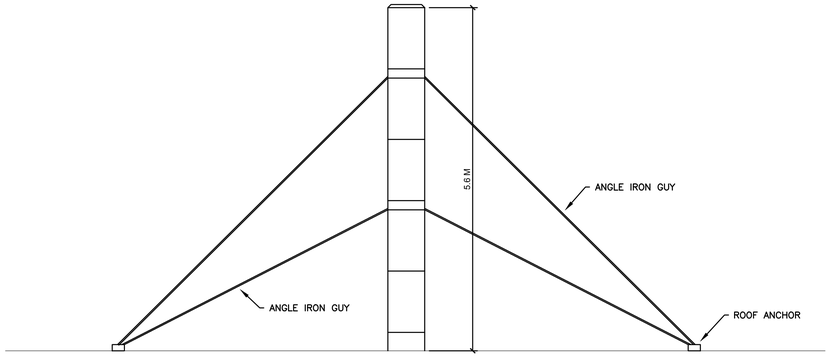

STACK ELEVATION A-A (ABOVE ROOF GRADE)

SCALE: 1 : 50

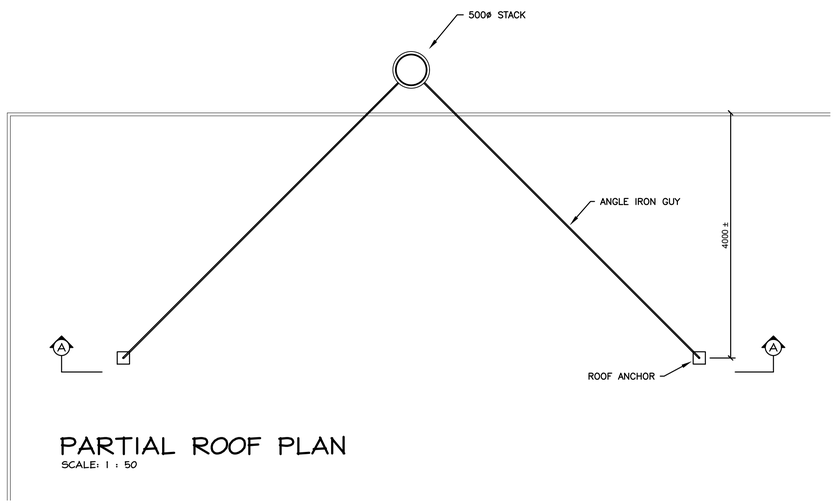

PARTIAL ROOF PLAN

SCALE: 1 : 50

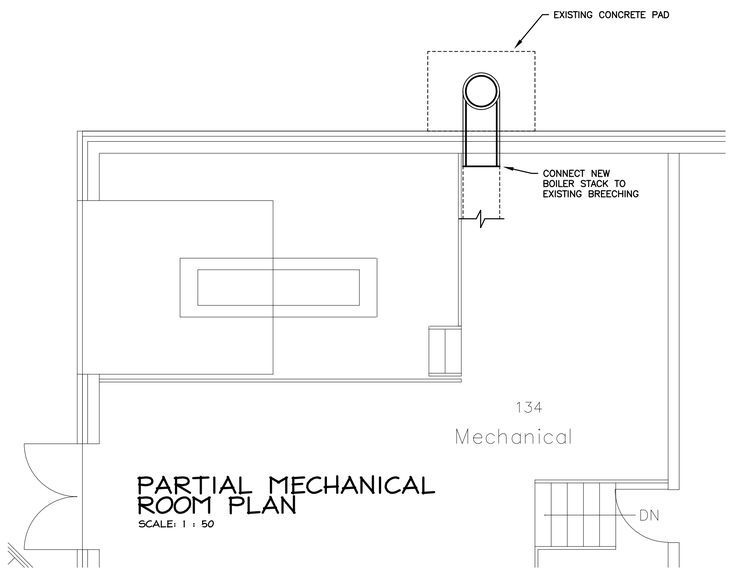

PARTIAL MECHANICAL ROOM PLAN

SCALE: 1 : 50

SPECIFICATIONS

1.0 GENERAL

1.1 GENERAL CONDITIONS:
ALL CONTRACT GENERAL CONDITIONS APPLY TO THIS SECTION.

1.2 SCOPE OF WORK:
THE WORK INCLUDED SHALL INCLUDE THE FURNISHING OF ALL LABOR, MATERIALS, EQUIPMENT, PLANT TOOLS AND SERVICES NECESSARY FOR THE INSTALLATION OF THE MECHANICAL SYSTEMS AS INDICATED.
- CUTTING & PATCHING
- REINSTATE FIRE RATING
- REMOVE AND DISPOSAL OF CHIMNEY, ETC.
- NEW CHIMNEY INSTALLATION (GENERAL/MECHANICAL)

1.3 SITE VISITS:
BEFORE COMMENCING WORK VISIT SITE AND VERIFY THAT REQUIREMENTS OF PLANS AND SPECIFICATIONS ARE CONSISTENT WITH SITE CONDITIONS.

ADVISE THE ENGINEER IN WRITING OF ANY DISCREPANCIES OR CONFLICTS.

NO ALLOWANCE SHALL BE MADE FOR FAILURE TO INCLUDE ITEMS WHICH A THOROUGH INVESTIGATION WOULD HAVE SHOWN TO BE REQUIRED.

BIDDERS SHOULD NOTE THAT THIS PROJECT IS A RENOVATION OF AN EXISTING BUILDING AND NO ATTEMPT HAS BEEN MADE TO SHOW ALL EXISTING CONDITIONS. EACH BIDDER IS RESPONSIBLE TO DETERMINE THE EXTENT OF THEIR WORK INVOLVED IN TYING INTO EXISTING SYSTEMS OR RE-ROUTING HIS WORK AROUND OBSTRUCTIONS.

1.4 THE MECHANICAL DRAWINGS ARE DIAGRAMMATIC, INTENDED TO SHOW GENERAL ARRANGEMENT AND SIZES OF SYSTEM COMPONENTS, AND SHALL NOT BE SCALED. THE ARCHITECTURAL AND STRUCTURAL DRAWINGS, AND EXISTING CONDITIONS SHALL GOVERN SPACE CONSTRAINTS, ACTUAL CONNECTION ARRANGEMENTS, DIMENSIONS AND FINISHES.

CONTRACTOR SHALL VISIT THE PROJECT SITE, THOROUGHLY INVESTIGATE AND BE FAMILIAR WITH ALL EXISTING CONDITIONS WHICH WILL AFFECT THEIR WORK.

THE EQUIPMENT LOCATIONS SHOWN ARE APPROXIMATE AND MUST BE SIZED AS PER SITE SPECIFIC REQUIREMENTS AND APPROVED BY OWNER.

ALL OFFSETS AND FITTINGS WHICH WILL BE NECESSARY TO ACCOMPLISH THE FINISHED INSTALLATION SHALL BE PROVIDED AT NO ADDITIONAL COST OR INCREASE IN THE CONTRACT. ALL EQUIPMENT AND MATERIALS SHALL BE NEW UNLESS NOTED OR SPECIFIED OTHERWISE.

PROTECT ALL EQUIPMENT AND MATERIALS FROM DAMAGE. PROVISIONS SHALL BE MADE TO PREVENT NOISE AND VIBRATION.

1.5 SAFETY REQUIREMENTS:

.1 CARRY OUT WORK OF THIS CONTRACT PLACING MAXIMUM EMPHASIS ON SAFETY FOR ALL WORKERS AND OTHER AUTHORIZED PERSONS WORKING OR CIRCULATING ON THE CONSTRUCTION SITE AS WELL AS SAFETY FOR BUILDING TENANTS ON FEDERAL GOVERNMENT PROPERTY. CONTRACTOR TO PREPARE SAFETY PLAN FOR REVIEW AND ACCEPTANCE PRIOR TO WORK PROCEEDING ON SITE.

.2 OBSERVE AND ENFORCE CONSTRUCTION SAFETY MEASURES REQUIRED BY THE NATIONAL BUILDING CODE OF CANADA, THE CANADA LABOR CODE PART 11, THE PROVINCIAL OCCUPATIONAL HEALTH AND SAFETY REGULATIONS, PROVINCIAL WORKER'S COMPENSATION BOARD, MUNICIPAL STATUTES AND AUTHORITIES, AND OWNER"S PLANT SAFETY REQUIREMENTS.

.3 IN EVENT OF CONFLICT BETWEEN ANY PROVISIONS OF ABOVE AUTHORITIES WITH THE MOST STRINGENT PROVISIONS WILL APPLY.

.4 COMPLY WITH REQUIREMENTS OF STANDARD FOR BUILDING CONSTRUCTION OPERATIONS FCC NO. 301 AND STANDARD FOR WELDING AND CUTTING FCC NO. 302 ISSUED BY THE FIRE COMMISSIONER OF CANADA.

.5 ELECTRICAL LOCK-OUT:

ENSURE THAT ELECTRICAL LOCK-OUT PROCEDURES ARE IN PLACE AND THAT A GUARANTEE OF ISOLATION IS OBTAINED BEFORE STARTING WORK ON ANY ELECTRICAL CIRCUIT OR FACILITY. CHECK FOR AND OBTAIN ANY SITE SPECIFIC GUARANTEE OF ELECTRICAL ISOLATION RULES AND PROCEDURES AS MAY BE ESTABLISHED BY CLIENT/BUILDING OWNER.

CLIENT/BUILDING OWNER:
THE ELECTRICAL LOCK-OUT PROCEDURES SHALL BE IN ACCORDANCE WITH SAFETY MEASURES REFERENCED IN .2 ABOVE AND SHALL INCLUDE LOCK-OUT TAGS, A WRITTEN RECORD OF ALL EVENTS (SIGNED OFF), ETC.

.6 WHMIS:

COMPLY WITH REQUIREMENTS OF WORKPLACE HAZARDOUS MATERIALS INFORMATION SYSTEM (WHMIS) REGARDING USE, HANDLING, STORAGE AND DISPOSAL OF HAZARDOUS MATERIALS AND REGARDING LABELING AND PROVISION OF MATERIAL SAFETY DATA SHEETS ACCEPTABLE TO LABOUR CANADA AND HEALTH AND WELFARE CANADA.

DELIVER COPIES OF WHMIS DATA SHEETS TO THE PROJECT MANAGER ON DELIVERY OF MATERIALS.

1.6 REFERENCE STANDARDS AND REGULATIONS:

.1 ALL WORK SHALL BE IN ACCORDANCE WITH THE FOLLOWING STANDARDS AND REGULATIONS IN THE EVENT OF A CONFLICT THE MORE STRINGENT REQUIREMENT SHALL BE MET.

- NATIONAL BUILDING CODE OF CANADA (2015)
- REGULATIONS OF PROVINCIAL DEPARTMENT OF LABOUR
- REGULATIONS OF PROVINCIAL DEPARTMENT OF HEALTH
- REGULATIONS OF PROVINCIAL DEPARTMENT OF THE ENVIRONMENT
- REQUIREMENTS OF PROVINCIAL FIRE MARSHALL
- REQUIREMENTS OF MUNICIPAL FIRE AUTHORITY

1.7 PERMITS AND TESTING:

.1 CONTRACTOR SHALL OBTAIN AND PAY FOR ANY PERMITS REQUIRED BY LOCAL CODES AND REGULATIONS AND ARRANGE FOR INSPECTIONS. A BUILDING PERMIT WILL NOT BE REQUIRED AS PART OF THIS CONTRACT.

.2 ANY ADDITIONAL MATERIALS OR LABOUR REQUIRED TO CONFORM TO ANY OF THE REGULATIONS OF REFERENCED STANDARDS SHALL BE FURNISHED UNDER THE CONTRACT WITH NO ADDITIONAL COST TO THE OWNER.

.3 TEST SYSTEMS IN ACCORDANCE WITH THE REQUIREMENTS OF THE REFERENCED STANDARDS, REGULATIONS AND AUTHORITIES HAVING JURISDICTION (AHJ).

1.8 QUALIFICATIONS:

.1 EXECUTION OF THE WORK SHALL BE BY LICENSED CONTRACTOR CERTIFIED FOR THE INSTALLATION OF SYSTEMS AND EQUIPMENT IN ACCORDANCE WITH THE REQUIREMENTS OF THE LOCAL CODES AND REGULATIONS.

1.9 SHOP DRAWINGS:

CONTRACTOR TO SUBMIT MINIMUM SIX (6) SETS OF SHOP DRAWINGS FOR REVIEW.

1.10 TEMPORARY HEAT:

TEMPORARY HEAT FOR THE PROJECT SHALL BE THE RESPONSIBILITY OF THE GENERAL CONTRACTOR. THE USE OF ANY EQUIPMENT INSTALLED ON THE JOB WILL ONLY BE PERMITTED AS NOTED IN THE ARCHITECTURAL GENERAL CONDITIONS OR IN THE INSTRUCTIONS TO BIDDERS.

1.11 CUTTING, PATCHING, AND DEMOLITION:

ALL CUTTING, PATCHING, AND DEMOLITION WILL BE THE RESPONSIBILITY OF THIS CONTRACTOR. REFER TO SPECIFICATION SECTION 1C FOR CUTTING AND PATCHING. REFER TO SPECIFICATION SECTION 2A FOR DEMOLITION SPECIFICATIONS.

1.12 INSTALLATION AND COMMISSIONING OF EQUIPMENT:

MANUFACTURER'S INSTRUCTIONS SHALL BE MADE AVAILABLE TO BOTH THE INSTALLING TRADESMEN AND THE ON-SITE INSPECTOR PRIOR TO INSTALLATION OF EQUIPMENT, THESE INSTRUCTIONS ARE TO BE READ, UNDERSTOOD AND CLOSELY FOLLOWED. FAILURE TO ABIDE BY THIS REQUIREMENT WILL PROVIDE JUSTIFICATION FOR THE ENGINEER TO REQUIRE REMOVAL AND RE-INSTALLATION.

ENSURE THAT ALL SAFETY DEVICES AND OTHER SIGNIFICANT ACCESSORIES ARE IN PLACE AND OPERABLE BEFORE STARTING MAJOR PIECES OF EQUIPMENT. AS PART OF THE COMMISSIONING PROCESS ACCESSORIES ARE TO BE CHECKED, CALIBRATED AND ADJUSTED AS NECESSARY TO ENSURE SAFE OPERATION.

FOLLOW MANUFACTURER'S INSTRUCTIONS IN DETAIL IN ESTABLISHING COMMISSIONING PROCEDURE.

1.13 PENETRATION OF FIRE SEPARATIONS:

.1 WHERE PIPES OR DUCTS PASS THROUGH WALLS OR FLOORS WHICH PROVIDE FIRE SEPARATIONS, DIV. 15 SHALL SEAL AROUND OPENINGS WITH ULC CLASSIFIED FIRE STOP MATERIAL IN ACCORDANCE WITH ULC LISTING INSTALLATION DETAILS. MATERIAL SHALL PROVIDE A FIRE RATING EQUAL TO THAT OF THE SEPARATION WHICH HAS BEEN PENETRATED. REFER TO ARCHITECTURAL DRAWINGS FOR FIRE SEPARATIONS.

.2 SUBMIT MATERIAL SHOP DRAWINGS AND ALL ULC LISTED INSTALLATION DETAILS FOR ALL PENETRATIONS APPLICABLE TO PROJECT.

.3 ACCEPTABLE PRODUCTS:
DOW CORNING FIRE STOP SYSTEM 3M FIRE BARRIER PENETRATION SEALING SYSTEM BIO-FIRE BIOTHERM OR BIO-K10 (SUPPLIED BY WORMALD, HILTI)

1.14 DEMONSTRATION OF COMPLETE SYSTEMS:

AT THE CONCLUSION OF THE JOB, THE CONTRACTOR SHALL REVIEW AND DEMONSTRATE TO THE OWNER ALL EQUIPMENT AND THEIR RESPECTIVE FUNCTIONS AND OPERATION. SUCH DEMONSTRATION SHALL BE PROVIDED FOR SUCH REASONABLE PERIODS OF TIME AS THE COMPLEXITY OF THE JOB WARRANTS, AND AS APPROVED BY THE ENGINEER. SUCH REVIEW AND DEMONSTRATION SHALL BE MADE BY AN AUTHORIZED REPRESENTATIVE OF THE CONTRACTOR, FULLY KNOWLEDGEABLE OF THE PROJECT, ITS INSTALLATION AND OPERATION.

PROVIDE THE ENGINEER WITH A SCHEDULE OF SYSTEM DEMONSTRATION AT LEAST TWO (2) WEEKS PRIOR TO DEMONSTRATION.

1.15 FINAL REVIEW:

PRIOR TO SUBSTANTIAL COMPLETION AND FINAL REVIEW OF THE PROJECT, CONTRACTOR WILL INSPECT THE PROJECT, PROVIDE A MECHANICAL DEFICIENCY LIST. PROVIDE CONFIRMATION THAT ALL ITEMS ON THE LIST HAVE BEEN CORRECTED AND PROVIDE THE OPERATION AND MAINTENANCE MANUALS. PROVIDE THE RECORD DRAWINGS AND PROVIDE THE DEMONSTRATION OF THE COMPLETE MECHANICAL SYSTEMS.

ALL OF THE ABOVE MUST BE COMPLETED PRIOR TO THE FINAL INSPECTION BY TH ENGINEER AND SUBSTANTIAL COMPLETION OF THE MECHANICAL SYSTEMS.

1.16 OPERATION AND MAINTENANCE MANUALS:

CONTRACTOR TO PROVIDE MAINTENANCE MANUALS FOR ALL EQUIPMENT INSTALLED. THREE (3) COPIES ORGANIZED IN 8 1/2" X 11" BINDERS TO BE PROVIDED.

1.17 RECORD DRAWINGS:

CONTRACTOR TO PROVIDE AS-BUILT RECORD DRAWINGS.

1.18 GUARANTEE:

THE CONTRACTOR SHALL GUARANTEE ALL HIS WORK FREE FROM DEFECTS FOR A PERIOD OF ONE (1) YEAR AFTER SUBSTANTIAL COMPLETION OF SUCH WORK BY THE OWNER AND SHALL MAKE GOOD ALL DEFECTS OTHER THAN NORMAL WEAR AND TEAR DURING THE LIFE OF THE GUARANTEE.

THE CONTRACTOR SHALL GUARANTEE ALL WORK AND EQUIPMENT SUPPLIED BY HIM TO WORK SATISFACTORILY AND TO ACCOMPLISH THE WORK FOR WHICH IT WAS INSTALLED DURING THE LIFE OF THE ABOVE GUARANTEE. AT ANY TIME DURING THIS PERIOD, HE SHALL MAKE ANY NECESSARY CHANGES AND ADJUSTMENTS, OR REPLACEMENTS, TO ACCOMPLISH THIS AT HIS OWN EXPENSE.

2.0 HANGERS:

CLEVIS TYPE WITH THREADED RODS.

3.0 HEATING:

3.1 BOILER STACKS:

.1 PROVIDE PRE-FAB CHIMNEY AS INDICATED.

.2 BOILER STACK TO BE COMMERCIAL TYPE WITH 50mm INSULATION, 20 GA 304 SS INNER LINER, 24 GA 04 SS OUTER WALL.

.3 BOILER STACK TO BE COMPLETE WITH ALL STAINLESS STEEL ACCESSORIES AND SUPPORTS. BAROMETRIC RELIEF DAMPER WHERE INDICATED AND/OR REQUIRED.

.4 THE HEIGHT OF THE STACK TO BE THE SAME AS THE EXISTING STACK (APPROX. 6.0 M ABOVE THE ROOF).

.5 INSTALL BOILER STACK IN STRICT ACCORDANCE WITH MANUFACTURER'S RECOMMENDATIONS.

.6 STANDARD OF ACCEPTANCE: SELKIRK MODEL IPS-C2

.7 ACCEPTABLE PRODUCTS: CHEMINEE LINING, E INC, ICC VIP, SECURITY CHIMNEY, VAN PACKER (CONFIRM ALL SPECIAL GUY WIRE REQUIREMENTS ARE INCLUDED AND ARE STAINLESS STEEL.)

.8 GUY WIRE ANCHORS ARE TO BE EQUAL TO THALER MODEL NO. ARS-301 STAINLESS STEEL.

.9 THE BOILER STACK IS TO BE SUPPORTED FROM THE EXISTING CONCRETE PAD TO THE BOTTOM OF THE STACK WITH SUITABLE STEEL SUPPORT. REVIEW WITH THE ENGINEER.

.10 THE BOILER STACK IS TO BE SUPPORTED TO THE BUILDING IN AT LEAST THREE (3) LOCATIONS SIMILAR TO THE EXISTING STACK. PROVIDE 38mm x 38mm ANGLE IRON GUYS FROM APPROXIMATELY 1.2 M FROM THE TOP OF THE STACK AND 3.2 M FROM THE TOP OF THE STACK TO SUITABLE STRUCTURAL ROOF ANCHORS. REVIEW WITH THE ENGINEER.

.11 BOILER STACK CONDENSATE PIPING TO BE PIPED TO NEARBY FLOOR DRAIN.

.12 THE PRESSURE SEAL MUST BE MADE ON THE INNER WALL OF THE STACK. PRESSURE SEALS CREATED AT THE OUTER WALL ARE UNACCEPTABLE.

.13 STACKS TO BE EQUIPPED WITH CLEANOUTS AT THE EXTERIOR OF THE BUILDING, LOCATED AT THE BOTTOM OF THE STACKS.

MCA CONSULTANTS INC
ENGINEERS · PROJECT MANAGEMENT
902.566.9223 info@mcaconsultants.ca www.mcaconsultants.ca

ISSUED FOR TENDER
22/01/18 by FJC

Prince Edward Island CANADA
Transportation, Infrastructure and Energy
PO Box 2000
Charlottetown
Prince Edward Island
Canada C1A 7N8
Tel 902 368 5100
Fax 902 569 0590
http://www.princeedwardisland.ca/

A = Detail #
BB = Sheet # (Where Detail Required)
CC = Sheet # (Where Detailed)

Project Title :
KENSINGTON INTERMEDIATE SENIOR HIGH SCHOOL STACK REPLACEMENT

Drawing Title :
PLANS & SPECIFICATIONS

REGISTERED PROFESSIONAL ENGINEER
F.J. CALLAGHAN
PROVINCE OF PRINCE EDWARD ISLAND

Scale : As Noted	Design By : FJC
Drawn By : LJDJ	Date : JANUARY 22, 2018
Project No.: 320-17078	Drawing # : M-1 of 1