PROVINCE OF PRINCE EDWARD ISLAND
DEPARTMENT OF TRANSPORTATION
INFRASTRUCTURE AND ENERGY

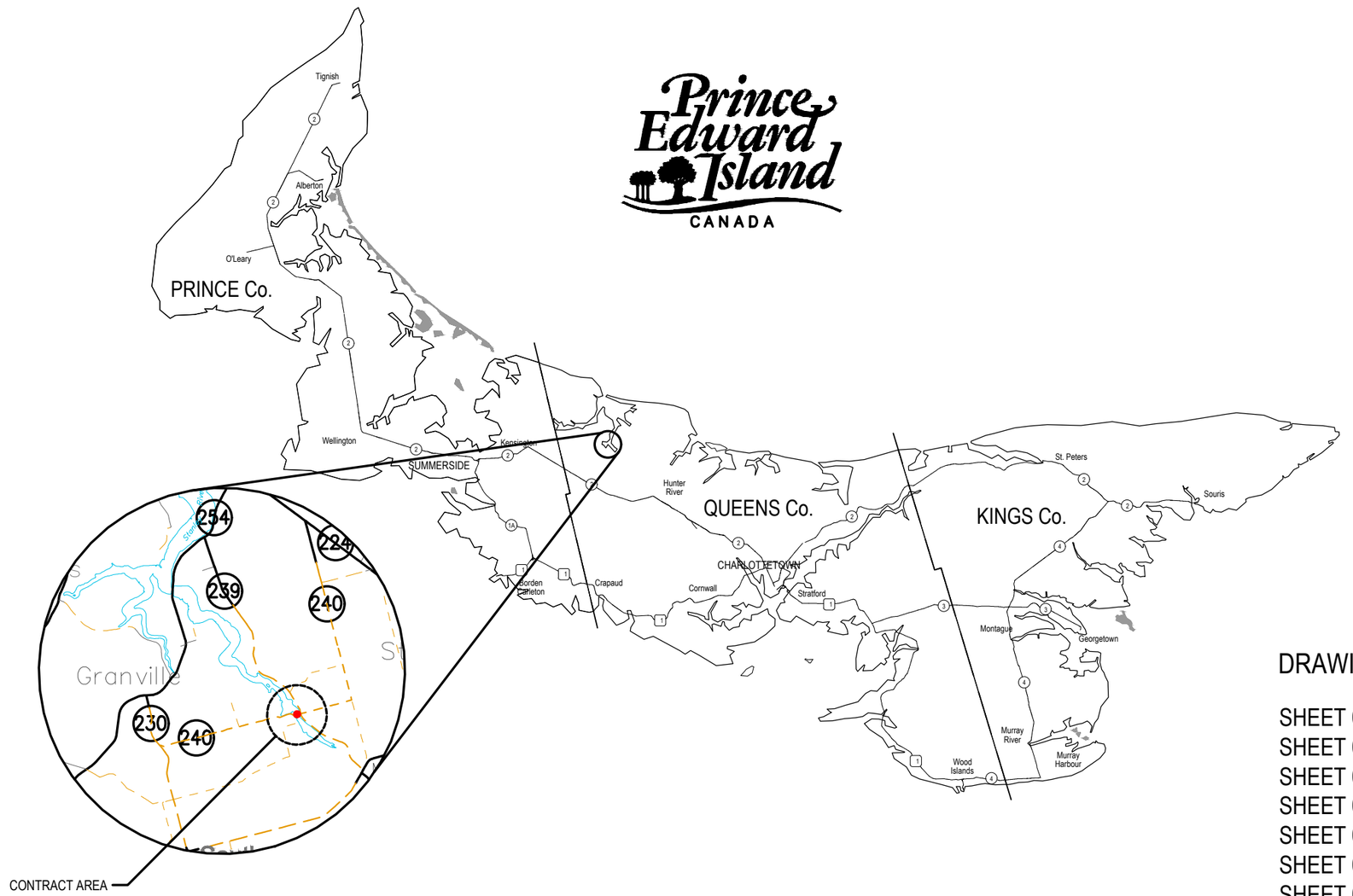

GUNNS BRIDGE REPLACEMENT

STATION 1+060 - 1+156.48

ISSUED FOR TENDER
FEBRUARY 5, 2020

DRAWING LIST

SHEET 01 GENERAL NOTES
SHEET 02 PLAN - EXISTING
SHEET 03 ELEVATION - EXISTING
SHEET 04 PLAN - NEW
SHEET 05 ELEVATION - NEW
SHEET 06 EMBANKMENTS AND LAYOUT
SHEET 07 SECTIONS & DETAILS 1
SHEET 08 SECTION & DETAILS 2
SHEET 09 CONNECTIONS AND BARRIER DETAILS
SHEET 10 PROFILE - ROUTE 240
SHEET 11 PROFILE - MCCOURT ROAD
SHEET 12 ROAD REPORT

1. THE INTENT OF THE WORK IS TO PROVIDE A THE NEW STRUCTURE ON ROUTE 240 NORTH ROAD, IN MILLVALE, TO REPLACE THE EXISTING STRUCTURE.

2. BOREHOLE DATA AND GEOTECHNICAL REPORT BY HARBOURSIDE ENGINEERING. THE DEPARTMENT DOES NOT ACCEPT ANY RESPONSIBILITY FOR THE ACCURACY OF THE INFORMATION IN THE REPORT.

3. ALL ELEVATIONS ARE RELATED TO PEI SMARTNET. RTCM-REF 3534, 374800.585, 711928.894, 51.327. COORDINATES ARE BASED ON NAD83.

4. ALL ELEVATIONS IN METRES. ALL DIMENSIONS IN MILLIMETRES U.N.O.

5. DO NOT SCALE DRAWINGS.

SCOPE

THE SCOPE OF THE WORK INCLUDES BUT IS NOT LIMITED TO REMOVAL OFF SITE OF EXISTING BRIDGE ELEMENTS, THE EXCAVATION AND REMOVALS OF MATERIALS, INCLUDING EXISTING FILL, EXISTING STRUCTURE, AND ALL OTHER MATERIALS INTENDED FOR REMOVAL, THE SUPPLY AND INSTALLATION OF NEW STRUCTURE SUPPLY AND PLACEMENT OF EARTH,AND ALL ROAD WORK, BACKFILL, GRANULARS,COMPACTION, AND ALL OTHER ANCILLARIES REQUIRED TO COMPLETE THE WORK AS INTENDED.

MATERIALS

ALL MATERIALS SHALL CONFORM TO THE MINIMUM REQUIREMENTS OF CSA S6-14 (CHBDC) AND THE SPECIFICATIONS AS OUTLINED BELOW. IN THE EVENT OF CONFLICT, THE MOST STRINGENT CLAUSES SHALL APPLY.

CONCRETE:

1. ALL CONCRETE MATERIALS, METHODS, CONSTRUCTION PRACTICES, ETC., SHALL CONFORM TO CSA STANDARDS A23.1 AND A23.2.

2. PROPORTION NORMAL DENSITY CONCRETE IN ACCORDANCE WITH A23.1. CEMENT SHALL BE TYPE SILICA FUME BLENDED, MIN. 28 DAY COMPRESSIVE STRENGTH SHALL BE 35MPa UNLESS NOTED OTHERWISE IN SCHEDULE 'A'. DURABILITY DESIGN IN ACCORDANCE WITH C1.8.11 OF CHBDC. CLASS OF EXPOSURE IS C-1. NOMINAL AGGREGATE SIZE SHALL BE 20 mm. SLUMP AT POINT OF DISCHARGE SHALL BE 180 mm +/- 20 mm (WITH THE AID OF SUPERPLASTICIZER). AIR CONTENT SHALL BE 7% +/- 1.5%. MAXIMUM WATER/CEMENT RATIO SHALL BE 0.4.

3. ADMIXTURES USED SHALL BE IN ACCORDANCE WITH ASTM C494 AND SHALL BE IDENTIFIED IN THE MIX DESIGN. NO WATER SHALL BE ADDED ON SITE.

REINFORCING STEEL:

1. CONCRETE REINFORCING STEEL SHALL CONFORM TO CSA STANDARD G30.18, GRADE 400W BARS AND SHALL MEET THE MINIMUM REQUIREMENTS OF CHBDC S6-14.

2. STEEL WIRES AND WELDED WIRE FABRIC SHALL CONFORM TO CSA STANDARDS G30.3, G30.5, G30.14 AND G30.15.

3. THE YIELD STRENGTH OF REINFORCING, fy, SHALL BE MIN 400 MPa.

4. CONCRETE COVER AND TOLERANCES SHALL BE AS OUTLINED ON THE DRAWINGS AND IN ACCORDANCE WITH CHBDC.

5. QUANTITY OF BARS TO BE DETERMINED BY ASSOCIATED TEXT NOTE.

STEEL:

1. ALL BOLTED CONNECTIONS (TIMBER TO TIMBER OR STEEL TO STEEL) TO BE NEW MATERIAL GRADE A307 HOT DIPPED GALVANIZED MINIMUM 610 G/SQM AS PER CSA G164.

2. ALL BARRIER STEEL MEMBERS TO BE NEW MATERIAL GRADE 350W. HOT DIPPED GALVANIZED MINIMUM 610 G/SQM AS PER CSA G164.

3. ALL STEEL PLATE TO BE NEW MATERIAL GRADE 300W. HOT DIPPED GALVANIZED MINIMUM 610 G/SQM AS PER CSA G164.

EXECUTION

DEMOLITION:

1. THE CONTRACTOR SHALL BE RESPONSIBLE FOR REMOVING THE EXISTING STRUCTURE IN ITS ENTIRETY FROM THE SITE AND DISPOSED OF IN AN ENVIRONMENTALLY ACCEPTABLE MANNER. THIS INCLUDES REMOVAL OF ALL CONCRETE AND TIMBER BELOW THE MUD LINE, RAILINGS, GUARD RAILS, CONNNECTIONS, AND ALL OTHER ITEMS ASSOCIATED WITH THE EXISTING STRUCTURE. REFER TO SCHEDULE 'A' SPECIAL PROVISIONS FOR ANY ITEMS TO BE DISMANTLED AND SALVAGED.

2. THE CONTRACTOR SHALL ENSURE THE SAFETY OF THE PUBLIC AND HIS EMPLOYEES DURING DEMOLITION WORK AS WELL AS OTHER CONSTRUCTION WORK. AT NO TIME SHALL ANY DEBRIS FROM NEITHER THE DEMOLITION PORTION NOR CONSTRUCTION BE ALLOWED TO ENTER THE WATER COURSE.

EXCAVATION AND BACKFILL:

1. ALL EXCAVATION AND BACKFILL WORK SHALL BE CONDUCTED IN STRICT ACCORDANCE WITH THE DEPARTMENTS STANDARD SPECIFICATIONS.

2. MAINTAIN ALL ENVIRONMENTAL CONTROLS AS REQUIRED BY THE DEPARTMENT'S ENVIRONMENTAL PROTECTION PLAN (EPP) OR AS INSTRUCTED ON SITE. AT A MINIMUM, A SILT BOOM AND TYPE 1 SILT FENCES ARE REQUIRED.

CONCRETE:

1. VERIFY LINES, GRADES AND REINFORCING DETAILS PRIOR TO FABRICATION OF FORMWORK. FABRICATE AND ERECT FORMWORK IN ACCORDANCE WITH S269.1.

2. FORM TIES SHALL BE REMOVABLE TIES, FREE OF DEVICES LEAVING HOLES LARGER THAN 25 mm DIAMETER.

3. CLEAN FORMWORK IN ACCORDANCE WITH A23.1 PRIOR TO PLACEMENT OF CONCRETE. LEAVE FORMWORK IN PLACE FOR AT LEAST 48 HOURS AFTER PLACEMENT OF CONCRETE. RE-USE OF FORMS SUBJECT TO REVIEW BY THE ENGINEER.

4. FABRICATE REINFORCING STEEL IN ACCORDANCE WITH CSA-A23.1, ANSI/ACI 315 AND REINFORCING STEEL MANUAL OF STANDARD PRACTICE BY THE REINFORCING STEEL INSTITUTE OF CANADA.

5. OBTAIN APPROVAL FOR LOCATIONS OF SPLICES OTHER THAN THOSE SHOWN ON THE DRAWINGS. LAPS TO BE 30 BAR DIAMETERS UNO.

6. PLACE REINFORCING STEEL AS INDICATED ON THE DRAWINGS AND IN ACCORDANCE WITH A23.1. REMOVE ALL MILL SCALE, OIL, GREASE OR OTHER DELETERIOUS MATERIALS BEFORE AND AFTER PLACEMENT. SECURE REINFORCING WITH ANNEALED WIRE OR APPROVED CLIPS AND CHAIRS. TAKE CARE TO ENSURE POSITION OF BARS AND CONCRETE COVER REMAINS UNALTERED DURING CONCRETING PROCEDURES.

7. ALLOW THE ENGINEER TO REVIEW THE REINFORCING STEEL PLACEMENT PRIOR TO PLACING CONCRETE.

8. PLACE CONCRETE IN ACCORDANCE WITH A23.1. DO NOT PLACE CONCRETE WHEN IT IS RAINING OR LIKELY TO RAIN. NOTIFY THE ENGINEER AT LEAST 48 HOURS PRIOR TO PLACEMENT OF CONCRETE.

9. DO NOT PERMIT VERTICAL FREE FALL OF MORE THAN 1.5 m. TAKE SPECIAL PRECAUTIONS TO PREVENT SEGREGATION OF CONCRETE, HONEYCOMBING AND VOIDS.

10. USE INTERNAL VIBRATORS TO ENSURE CONSOLIDATION OF CONCRETE. USE OF FORM VIBRATORS NOT PERMITTED.

11. TOOLS USED SHALL BE FREE OF RUST AND OTHER DELETERIOUS MATERIALS TO AVOID EFFLORESCENCE AND STAINING OF CONCRETE.

12. CONCRETE TOLERANCES SHALL BE IN ACCORDANCE WITH A23.1, STRAIGHT EDGE METHOD.

13. FINISH CONCRETE IN ACCORDANCE WITH A23.1. USE SMOOTH FORM FINISH FOR ALL CONCRETE SURFACES. REMOVE FINS AND PATCH HOLES AND DEFECTS AS INSTRUCTED.

14. REMOVE TIE CONES AND PATCH HOLES WITH LATEX MODIFIED CONCRETE. MIX TO BE IN STRICT ACCORDANCE WITH MANUFACTURER'S SPECIFICATIONS.

15. CONCRETE SHALL BE PROTECTED FROM FREEZING, DRYING, HIGH TEMPERATURE AND MOISTURE LOSS FOR AT LEAST SEVEN DAYS OR FOR SUFFICIENT TIME TO ACHIEVE DESIRABLE PROPERTIES OF THE CONCRETE.

16. CURING SHALL BE ACHIEVED BY MOIST CURING WITH BURLAP COVERING FOR A MINIMUM OF THREE (3) DAYS. THE BURLAP SHALL BE KEPT CONTINUOUSLY MOIST FOR THIS CURING PERIOD.

17. FOR CONCRETE PLACED AGAINST HARDENED CONCRETE: CLEAN SURFACE OF LATENCE AND ROUGHEN SURFACE TO 5 mm ± APLITUDE, 15mm ± SPACING U.N.O.

18. ALL FRESHLY PLACED CONCRETE SHALL BE PROTECTED FROM THE ELEMENTS AND FROM DEFACEMENT DUE TO CONSTRUCTION OPERATIONS, TRAFFIC AND VANDALS. THE EFFECTS OF DIRECT SUNSHINE, DRYING WINDS, COLD, EXCESSIVE HEAT AND RUNNING WATER ARE PARTICULARLY HARMFUL.THE CONCRETE SHALL BE PROTECTED BY THE USE OF ADEQUATE TARPAULINS OR OTHER SUITABLE MATERIAL TO COMPLETELY COVER OR ENCLOSE ALL FRESHLY FINISHED CONCRETE.

19. THE CONTRACTOR SHALL PROVIDE COLD WEATHER CURING AS REQUIRED BY CSA A23.1. THIS MAY INCLUDE THE PROVISION OF INSULATED TARPS, ENCLOSURES AND EXTERNAL HEAT SOURCE AS REQUIRED TO MEET THE SPECIFIED LIMITS OF A23.1. THIS SHALL BE CONSIDERED INCIDENTAL TO THE WORK AND SHALL NOT BE MEASURED OR PAID FOR.

20. TESTING SHALL BE CONDUCTED BY THE DEPARTMENT FOR THE DEPARTMENT. ANY TESTING CARRIED OUT DOES NOT RELIEVE THE CONTRACTOR IN ANY WAY TO ENSURE QUALITY CONTROL AND QUALITY ASSURANCE FOR THE MATERIALS OR CONSTRUCTION PROCEDURES. ANY MATERIAL (CONCRETE, GRANULARS, ETC.) FOUND TO BE DEFECTIVE OR DOES NOT MEET THE SPECIFIED REQUIREMENTS SHALL BE REMOVED FROM THE SITE AT THE CONTRACTOR'S EXPENSE.

21. CONCRETE COVERS AND TOLERANCES SHALL BE AS FOLLOWS:
- FORMED AND TOP SURFACES: 70mm +/- 10mm
- CAST AGAINST EARTH:100mm +/- 25mm

22. ALL REINFORCING STEEL TO BE INSPECTED BY THE ENGINEER PRIOR TO CLOSING UP FORMWORK AND PLACING CONCRETE. LOCATION OF CONSTRUCTION JOINTS AND SEQUENCE OF CONCRETE PLACEMENT TO BE APPROVED BY THE ENGINEER.

DESIGN LOAD

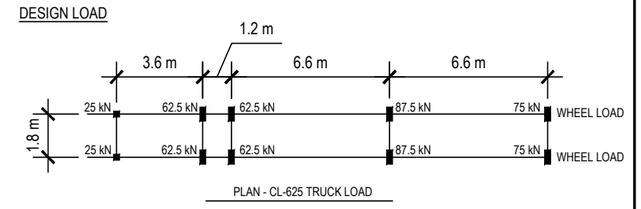

PLAN - CL-625 TRUCK LOAD

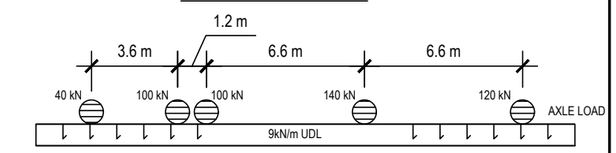

ELEVATION - CL-625 LANE LOAD

REGISTERED PROFESSIONAL ENGINEER
NEIL G. LAWLESS
No. 399
PROVINCE OF PRINCE EDWARD ISLAND

Prince Edward Island CANADA

DEPT OF TRANSPORTATION, INFRASTRUCTURE, AND ENERGY
Tel 902 368 5100
Fax 902 368 5395
http://www.gov.pe.ca/
PO Box 2000
Charlottetown
Prince Edward Island
Canada C1A 7N8

ALL WORK SHALL BE CONDUCTED IN ACCORDANCE WITH TIE's STANDARD SPECIFICATIONS AND ENVIRONMENTAL PROTECTION PLAN (EPP).

MAINTAIN ENVIRONMENTAL CONTROLS UNTIL VEGETATION HAS ESTABLISHED OR AS INSTRUCTED ON SITE.

ALL DRIVEWAY CULVERTS AND SIDE SLOPES SHALL BE MIN. 3H:1V

SURVEY BY:	T.I.E.	SCALE:	AS NOTED
DRAWN BY:	K. MACEACHERN	COUNTY:	PRINCE
APPROVED BY:	N. LAWLESS		
PROJECT No.:	2020003		

No.	REVISIONS	DATE
0	ISSUED FOR TENDER	FEB. 5, 2020

STATIONING:

CONTROL SECTION:

JOB: GUNNS BRIDGE REPLACEMENT

SHEET NAME: GENERAL NOTES

SHEET No. S1 OF 12

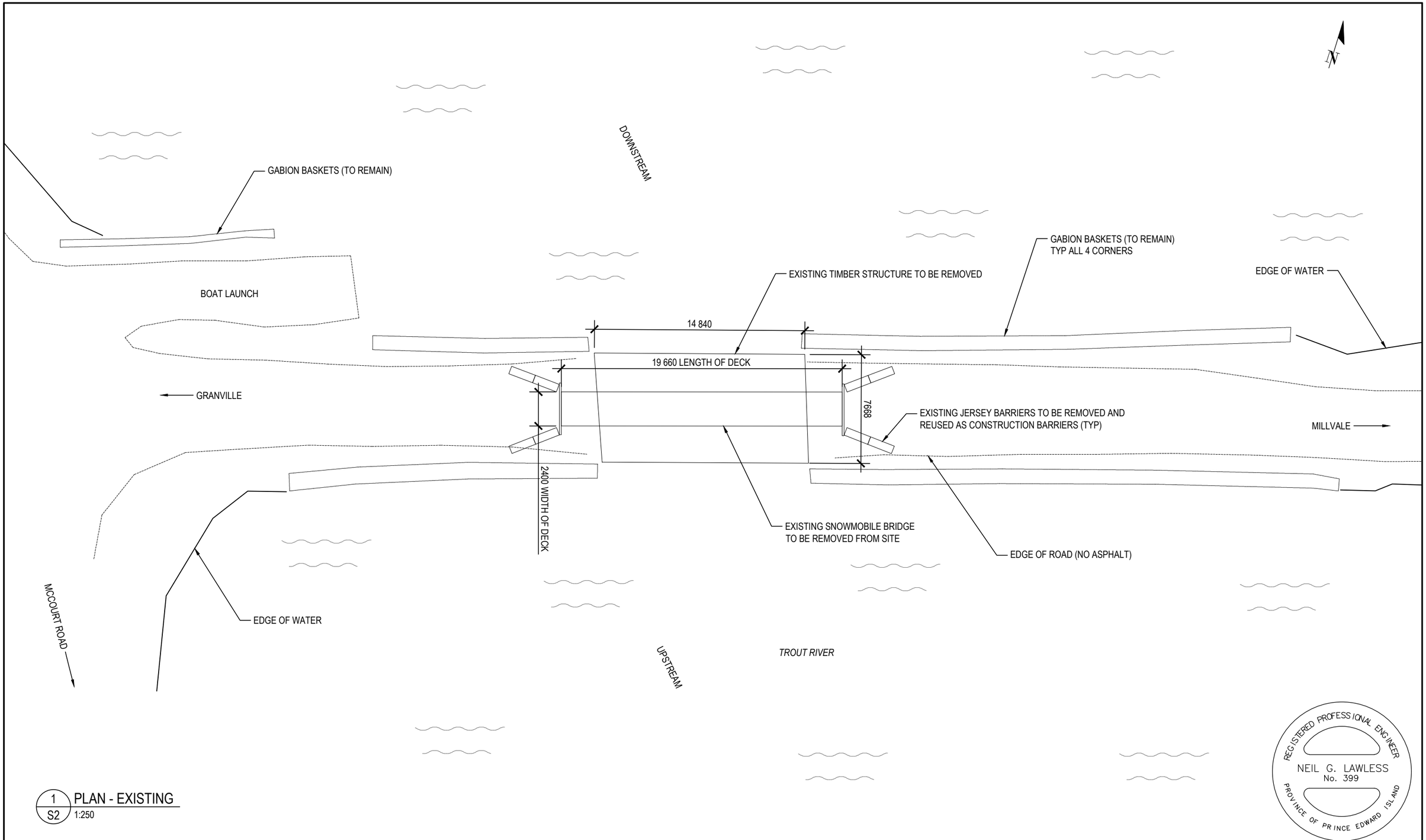

1 / S2 PLAN - EXISTING
1:250

Prince Edward Island CANADA

DEPT OF TRANSPORTATION, INFRASTRUCTURE, AND ENERGY

Tel 902 368 5100
Fax 902 368 5395
http://www.gov.pe.ca/

PO Box 2000
Charlottetown
Prince Edward Island
Canada C1A 7N8

ALL WORK SHALL BE CONDUCTED IN ACCORDANCE WITH TIE's STANDARD SPECIFICATIONS AND ENVIRONMENTAL PROTECTION PLAN (EPP).

MAINTAIN ENVIRONMENTAL CONTROLS UNTIL VEGETATION HAS ESTABLISHED OR AS INSTRUCTED ON SITE.

ALL DRIVEWAY CULVERTS AND SIDE SLOPES SHALL BE MIN. 3H:1V

SURVEY BY:	T.I.E.	SCALE:	AS NOTED
DRAWN BY:	K. MACEACHERN	COUNTY:	PRINCE
APPROVED BY:	N. LAWLESS		
PROJECT No.:	2020003		

No.	REVISIONS	DATE
0	ISSUED FOR TENDER	FEB. 5, 2020

STATIONING:

CONTROL SECTION:

JOB: GUNNS BRIDGE REPLACEMENT

SHEET NAME: PLAN - EXISTING

SHEET No. S2 OF 12

NOTE:

1. EXISTING STRUCTURE'S MATERIAL, FRAMING SYSTEM, AND EXTENT IS NOT NECESSARILY INDICATED ON TIE DRAWINGS. BIDDERS TO ACCOUNT FOR SUCH DURING TENDER. NO ADDITIONAL COSTS RELATED TO DEMOLITION NOR ANY EFFECTS ON ANY CONSTRUCTION ACTIVITY AS A RESULT OF THE EXISTING CONDITIONS SHALL BE CONSIDERED.
2. ALL DIMENSIONS FOR EXISTING STRUCTURE ARE APPROXIMATE. CONTRACTOR TO VERIFY ON SITE.
3. ALL DIMENSIONS IN MILLIMETRES. ALL ELEVATIONS IN METRES.
4. ELEVATIONS ARE APPROXIMATE.

NOTE:

ENTIRE SNOWMOBILE BRIDGE TO BE SALVAGED AS A WHOLE (ie NOT DISASSEMBLED), AND DELIVERED TO DEPARTMENT'S CHARLOTTETOWN STORAGE YARD.

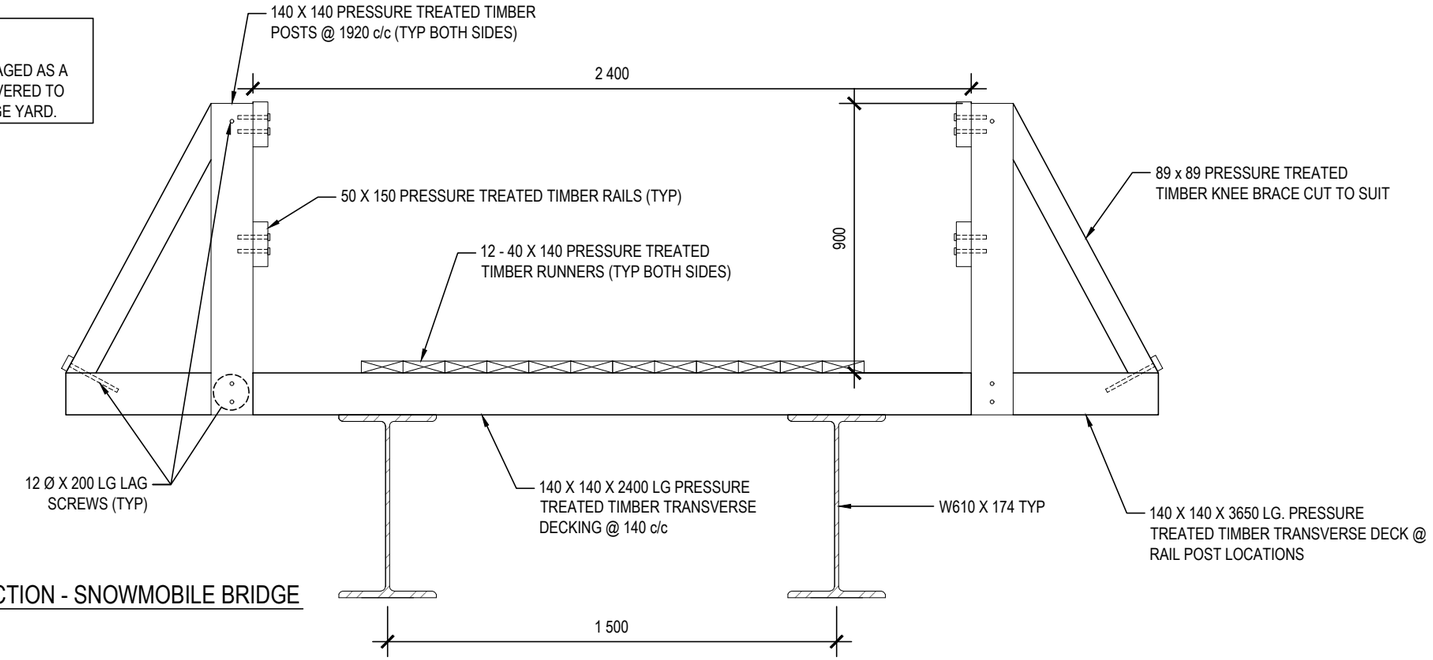

2 / S3 SECTION - SNOWMOBILE BRIDGE
1:20

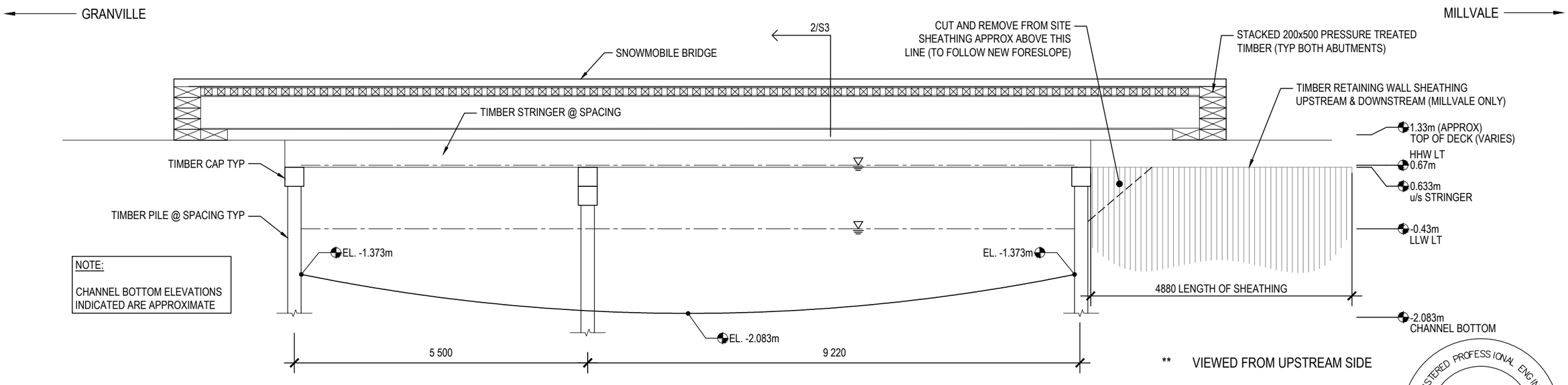

NOTE:

CHANNEL BOTTOM ELEVATIONS INDICATED ARE APPROXIMATE

1 / S3 ELEVATION - EXISTING
1:75

REGISTERED PROFESSIONAL ENGINEER
NEIL G. LAWLESS
No. 399
PROVINCE OF PRINCE EDWARD ISLAND

Prince Edward Island CANADA

DEPT OF TRANSPORTATION, INFRASTRUCTURE, AND ENERGY
Tel 902 368 5100
Fax 902 368 5395
http://www.gov.pe.ca/
PO Box 2000
Charlottetown
Prince Edward Island
Canada C1A 7N8

ALL WORK SHALL BE CONDUCTED IN ACCORDANCE WITH TIE's STANDARD SPECIFICATIONS AND ENVIRONMENTAL PROTECTION PLAN (EPP).

MAINTAIN ENVIRONMENTAL CONTROLS UNTIL VEGETATION HAS ESTABLISHED OR AS INSTRUCTED ON SITE.

ALL DRIVEWAY CULVERTS AND SIDE SLOPES SHALL BE MIN. 3H:1V

SURVEY BY:	T.I.E.	SCALE:	AS NOTED
DRAWN BY:	K. MACEACHERN	COUNTY:	PRINCE
APPROVED BY:	N. LAWLESS		
PROJECT No.:	2020003		

No.	REVISIONS	DATE
0	ISSUED FOR TENDER	FEB. 5, 2020

STATIONING:

CONTROL SECTION:

JOB: GUNNS BRIDGE REPLACEMENT

SHEET NAME: ELEVATION - EXISTING

SHEET No. S3 OF 12

NOTE:

1. MINIMIZE EXTENT OF EXCAVATION WHILE REMOVING EXISTING STRUCTURE AND PLACING NEW ONE.

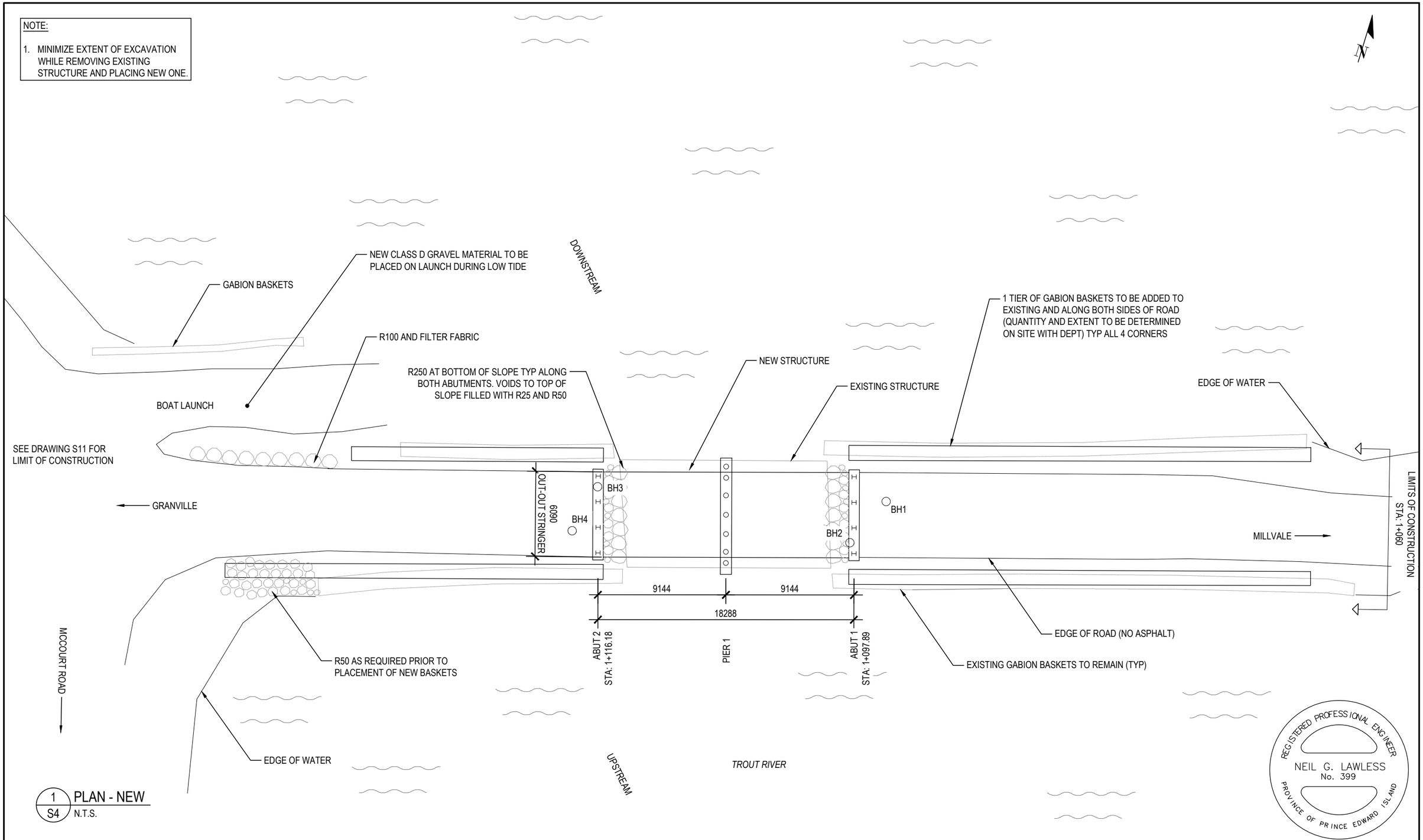

1 / S4 PLAN - NEW
N.T.S.

Prince Edward Island CANADA

DEPT OF TRANSPORTATION, INFRASTRUCTURE, AND ENERGY

Tel 902 368 5100
Fax 902 368 5395
http://www.gov.pe.ca/

PO Box 2000
Charlottetown
Prince Edward Island
Canada C1A 7N8

ALL WORK SHALL BE CONDUCTED IN ACCORDANCE WITH TIE's STANDARD SPECIFICATIONS AND ENVIRONMENTAL PROTECTION PLAN (EPP).

MAINTAIN ENVIRONMENTAL CONTROLS UNTIL VEGETATION HAS ESTABLISHED OR AS INSTRUCTED ON SITE.

ALL DRIVEWAY CULVERTS AND SIDE SLOPES SHALL BE MIN. 3H:1V

SURVEY BY:	T.I.E.	SCALE:	AS NOTED
DRAWN BY:	K. MACEACHERN	COUNTY:	PRINCE
APPROVED BY:	N. LAWLESS		
PROJECT No.:	2020003		

No.	REVISIONS	DATE
0	ISSUED FOR TENDER	FEB. 5, 2020

STATIONING:

CONTROL SECTION:

JOB: GUNNS BRIDGE REPLACEMENT

SHEET NAME: PLAN - NEW

SHEET No. S4 OF 12

NOTE:

1. ALL CONSTRUCTION (FROM PROJECT START TO COMPLETION) SHALL BE PREFORMED WHILE WATERCOURSE REMAINS LIVE (I.E. UNUBSTRUCTED FLOWING WATER).
2. REFER TO PLAN VIEW DRAWING FOR BH LOCATION RELATIVE TO STRUCTURE.
3. REFER TO GEOTECH REPORT FOR MORE EXACT BOREHOLE DATA AND ELEVATIONS.
4. REFER TO SEPARATE DRAWING FOR ROAD CONSTRUCTION.

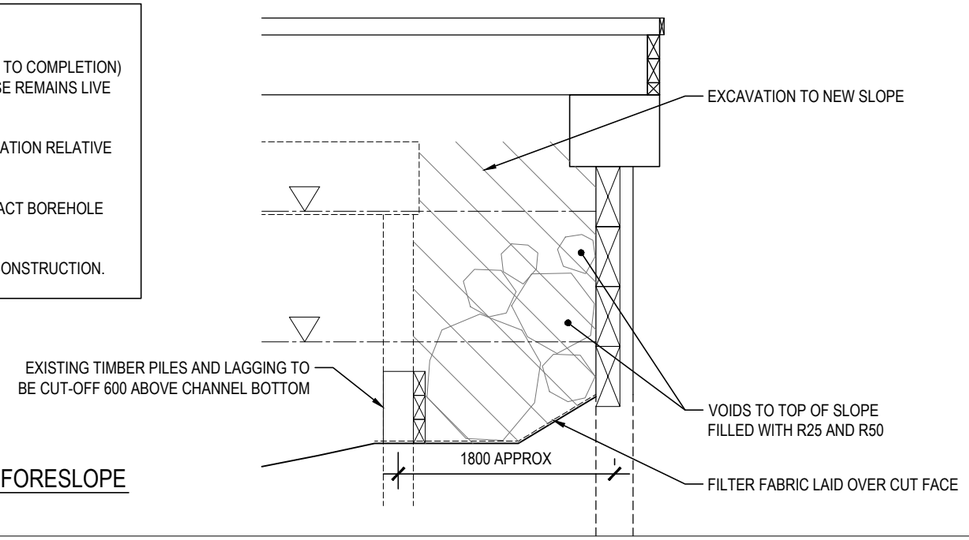

1 / S5 DETAIL - TYPICAL RIPRAP AT FORESLOPE
1:50

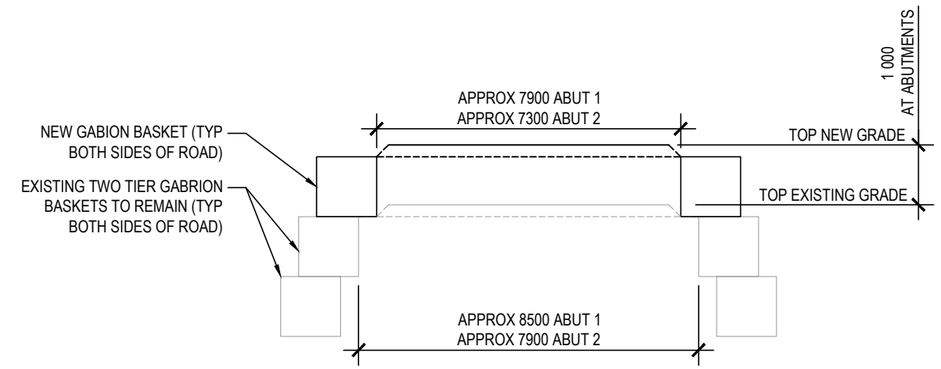

2 / S5 SECTION - TYPICAL GABION BASKET LAYOUT
1:100

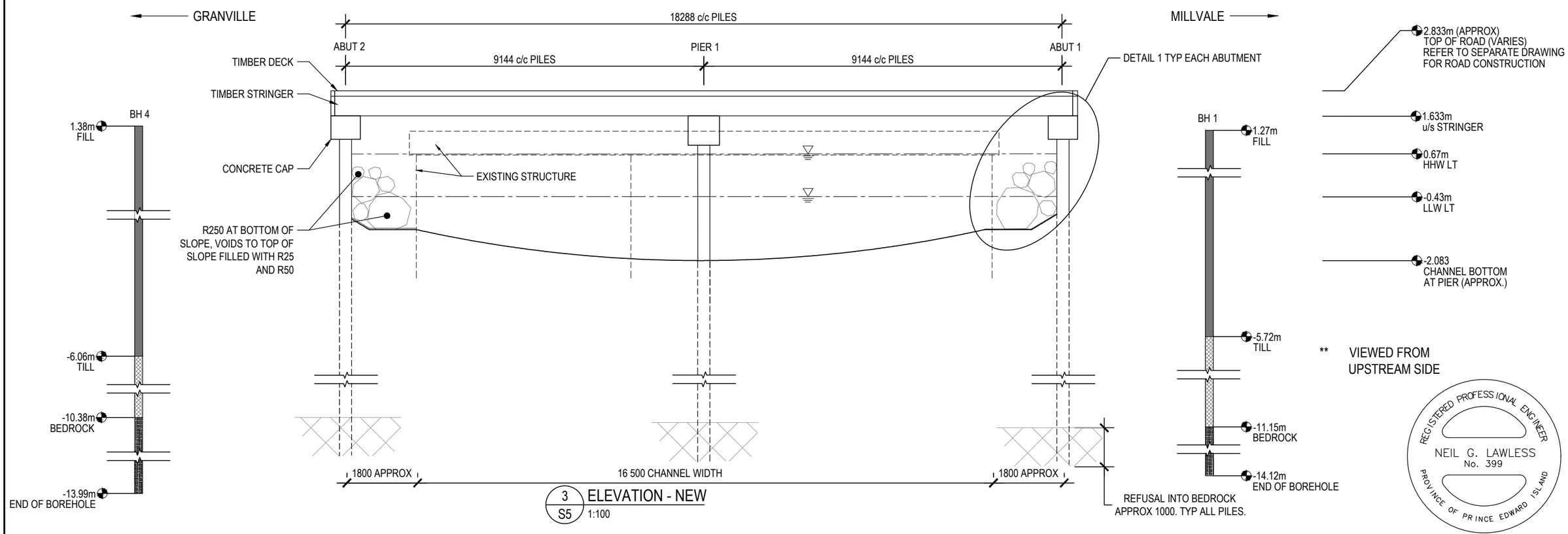

3 / S5 ELEVATION - NEW
1:100

REGISTERED PROFESSIONAL ENGINEER
NEIL G. LAWLESS
No. 399
PROVINCE OF PRINCE EDWARD ISLAND

Prince Edward Island CANADA

DEPT OF TRANSPORTATION, INFRASTRUCTURE, AND ENERGY

Tel 902 368 5100
Fax 902 368 5395
http://www.gov.pe.ca/

PO Box 2000
Charlottetown
Prince Edward Island
Canada C1A 7N8

ALL WORK SHALL BE CONDUCTED IN ACCORDANCE WITH TIE's STANDARD SPECIFICATIONS AND ENVIRONMENTAL PROTECTION PLAN (EPP).

MAINTAIN ENVIRONMENTAL CONTROLS UNTIL VEGETATION HAS ESTABLISHED OR AS INSTRUCTED ON SITE.

ALL DRIVEWAY CULVERTS AND SIDE SLOPES SHALL BE MIN. 3H:1V

SURVEY BY:	T.I.E.	SCALE:	AS NOTED
DRAWN BY:	K. MACEACHERN	COUNTY:	PRINCE
APPROVED BY:	N. LAWLESS		
PROJECT No.:	2020003		

No.	REVISIONS	DATE
0	ISSUED FOR TENDER	FEB. 5, 2020

STATIONING:

CONTROL SECTION:

JOB: GUNNS BRIDGE REPLACEMENT

SHEET NAME: ELEVATION - NEW

SHEET No. S5 OF 12

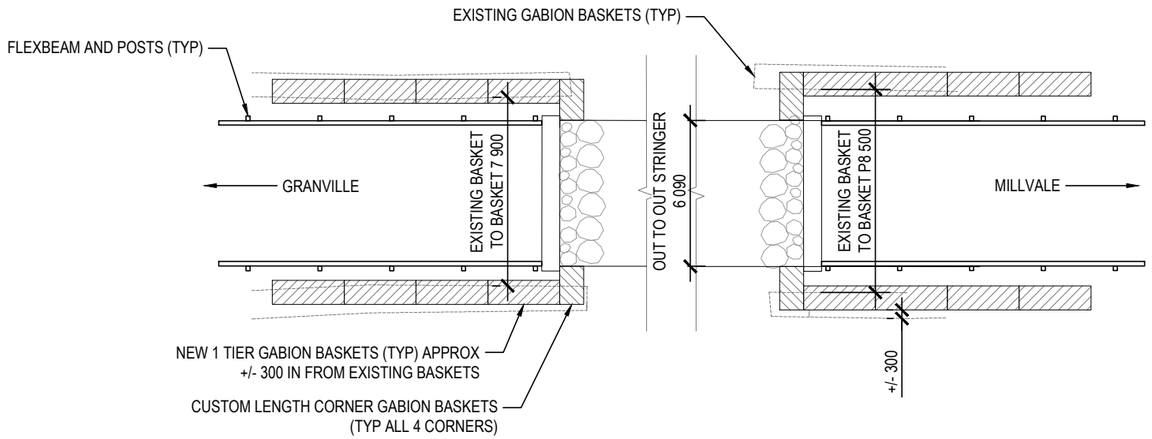

1 / S6 PLAN - TYPICAL EMBANKMENT
1:250

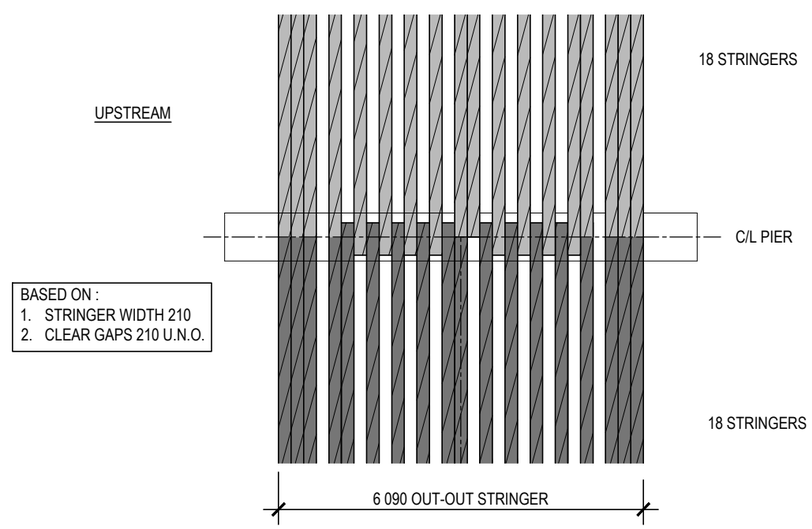

BASED ON :
1. STRINGER WIDTH 210
2. CLEAR GAPS 210 U.N.O.

TOP OF CAP ELEVATION (AT CAP CENTERLINE)	
LOCATION	ELEVATION
ABUT 1	1.661m
PIER 1	1.756m
ABUT 2	1.851m

2 / S6 PLAN - STRINGER LAYOUT
N.T.S.

REGISTERED PROFESSIONAL ENGINEER
NEIL G. LAWLESS
No. 399
PROVINCE OF PRINCE EDWARD ISLAND

Prince Edward Island CANADA
DEPT OF TRANSPORTATION, INFRASTRUCTURE, AND ENERGY
Tel 902 368 5100
Fax 902 368 5395
http://www.gov.pe.ca/
PO Box 2000
Charlottetown
Prince Edward Island
Canada C1A 7N8

ALL WORK SHALL BE CONDUCTED IN ACCORDANCE WITH TIE's STANDARD SPECIFICATIONS AND ENVIRONMENTAL PROTECTION PLAN (EPP).

MAINTAIN ENVIRONMENTAL CONTROLS UNTIL VEGETATION HAS ESTABLISHED OR AS INSTRUCTED ON SITE.

ALL DRIVEWAY CULVERTS AND SIDE SLOPES SHALL BE MIN. 3H:1V

SURVEY BY:	T.I.E.	SCALE:	AS NOTED
DRAWN BY:	K. MACEACHERN	COUNTY:	PRINCE
APPROVED BY:	N. LAWLESS		
PROJECT No.:	2020003		

No.	REVISIONS	DATE
0	ISSUED FOR TENDER	FEB. 5, 2020

STATIONING:
CONTROL SECTION:
JOB: GUNNS BRIDGE REPLACEMENT
SHEET NAME: EMBANKMENTS AND LAYOUT
SHEET No. S6 OF 12

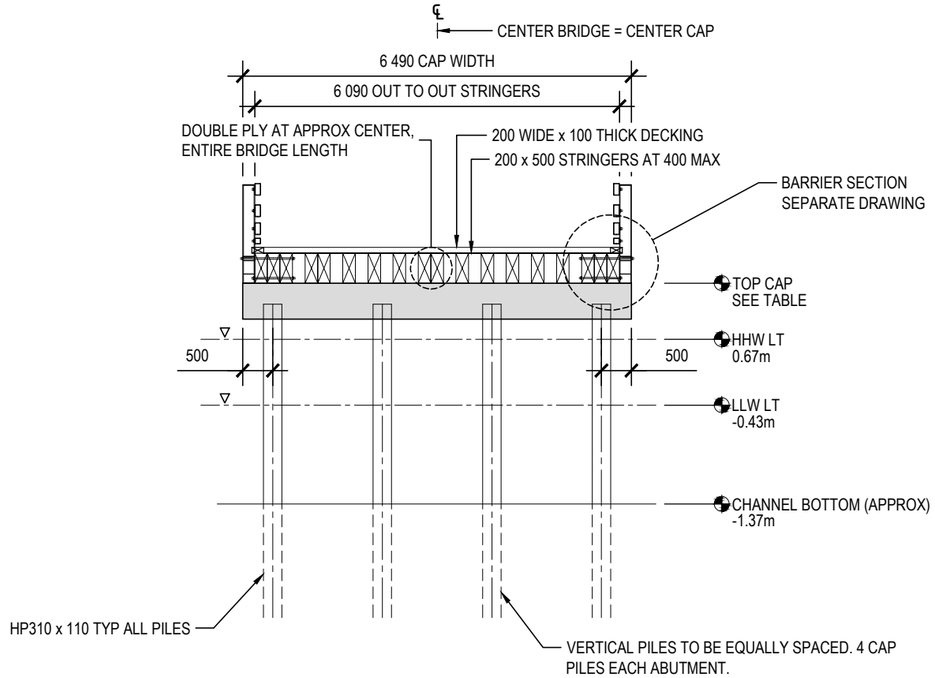

1 / S7 TRANSVERSE ABUTMENT SECTION - TYPICAL
1:100

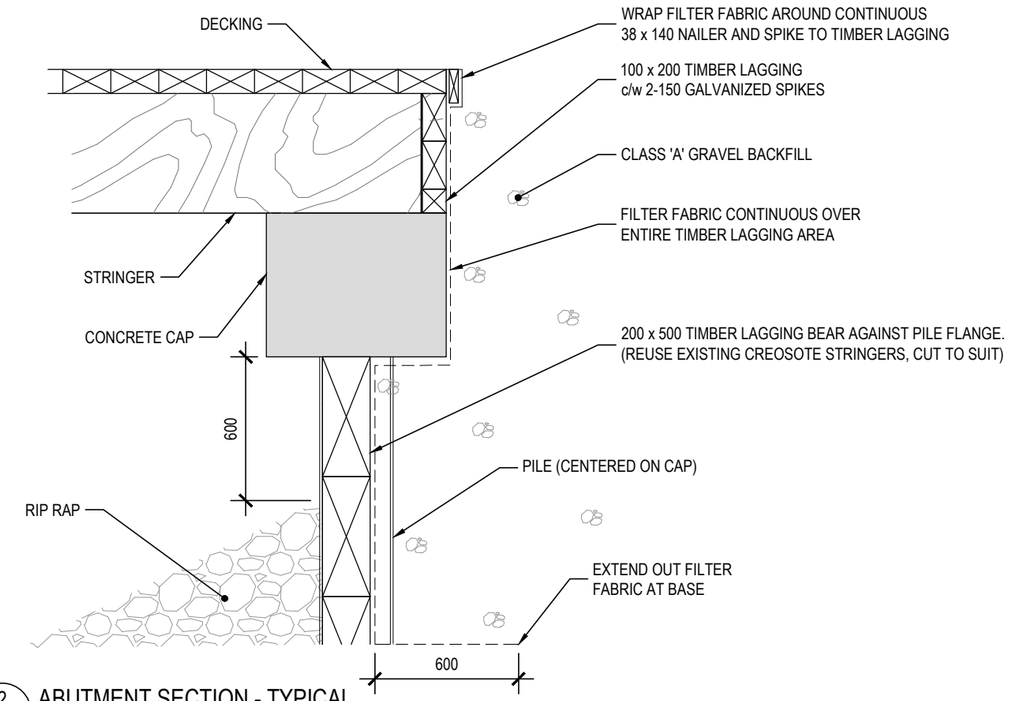

2 / S7 ABUTMENT SECTION - TYPICAL
1:25

THESE NOTES APPLY TO ALL SECTIONS AND DETAILS FOR ENTIRE PROJECT

NOTE:

1. ALL STEEL HARDWARE AND CONNECTIONS TO BE HOT DIPPED GALVANIZED.
2. ALL NUTS TO BE FULLY THREADED/ENGAGED, WITH EXPOSED THREADS BEYOND NUT.
3. ALL THREADED CONNECTIONS TO HAVE FLAT WASHER, LOCK WASHER, AND NUT.
4. TOUCH UP FIELD WELD AREAS WITH COLD GALVANIZING.

REGISTERED PROFESSIONAL ENGINEER
NEIL G. LAWLESS
No. 399
PROVINCE OF PRINCE EDWARD ISLAND

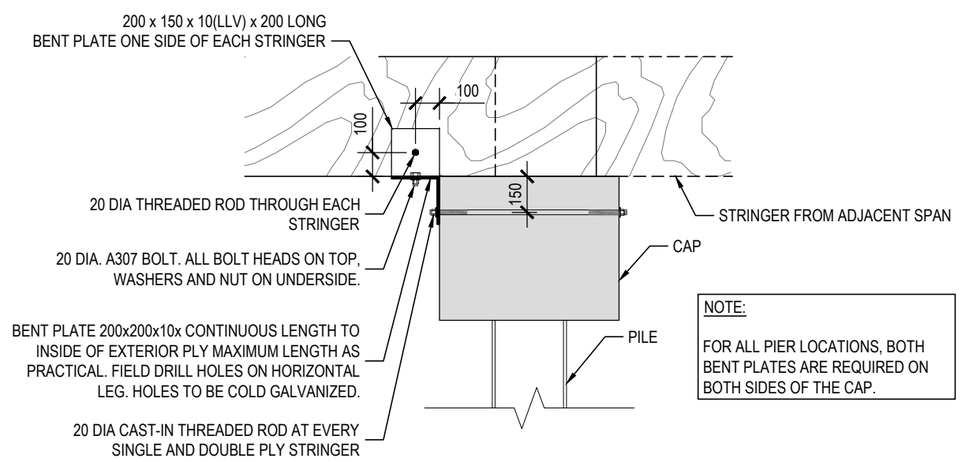

NOTE:

FOR ALL PIER LOCATIONS, BOTH BENT PLATES ARE REQUIRED ON BOTH SIDES OF THE CAP.

3 / S7 STRINGER TO CAP CONNECTION DETAIL (ABUTMENT AND PIER) - TYPICAL SINGLE AND DOUBLE STRINGERS
1:25

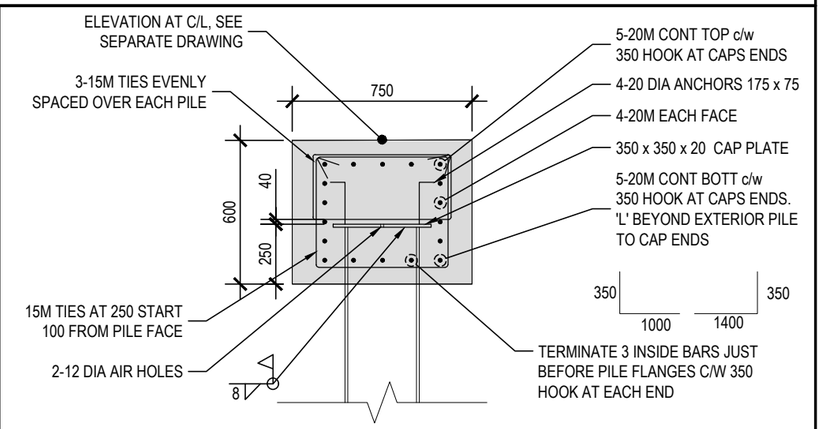

NOTE:
1. PLACE HARDWOOD SHIMS BETWEEN u/s STRINGER AND CAP, SHOULD STRINGER NOT FULLY BEAR ALONG CAP WIDTH AND STRINGER WIDTH.
2. TOP AND SIDE BAR LENGTHS, INCLUDING END HOOKS, TO HAVE NO SPLICES.
3. FINISHED TOP AND SIDE CAP SURFACES TO RECEIVE CONCRETE SEALER (HYDROZO 100) ENTIRE AREA PRIOR TO STRINGER INSTALLATION.

4 / S7 ABUTMENT CAP SECTION - TYPICAL
1:25

Prince Edward Island CANADA
DEPT OF TRANSPORTATION, INFRASTRUCTURE, AND ENERGY
Tel 902 368 5100
Fax 902 368 5395
http://www.gov.pe.ca/
PO Box 2000
Charlottetown
Prince Edward Island
Canada C1A 7N8

ALL WORK SHALL BE CONDUCTED IN ACCORDANCE WITH TIE's STANDARD SPECIFICATIONS AND ENVIRONMENTAL PROTECTION PLAN (EPP).

MAINTAIN ENVIRONMENTAL CONTROLS UNTIL VEGETATION HAS ESTABLISHED OR AS INSTRUCTED ON SITE.

ALL DRIVEWAY CULVERTS AND SIDE SLOPES SHALL BE MIN. 3H:1V

SURVEY BY:	T.I.E.	SCALE:	AS NOTED
DRAWN BY:	K. MACEACHERN	COUNTY:	PRINCE
APPROVED BY:	N. LAWLESS		
PROJECT No.:	2020003		

No.	REVISIONS	DATE
0	ISSUED FOR TENDER	FEB. 5, 2020

STATIONING:

CONTROL SECTION:

JOB: GUNNS BRIDGE REPLACEMENT

SHEET NAME: SECTIONS AND DETAILS 1

SHEET No. S7 OF 12

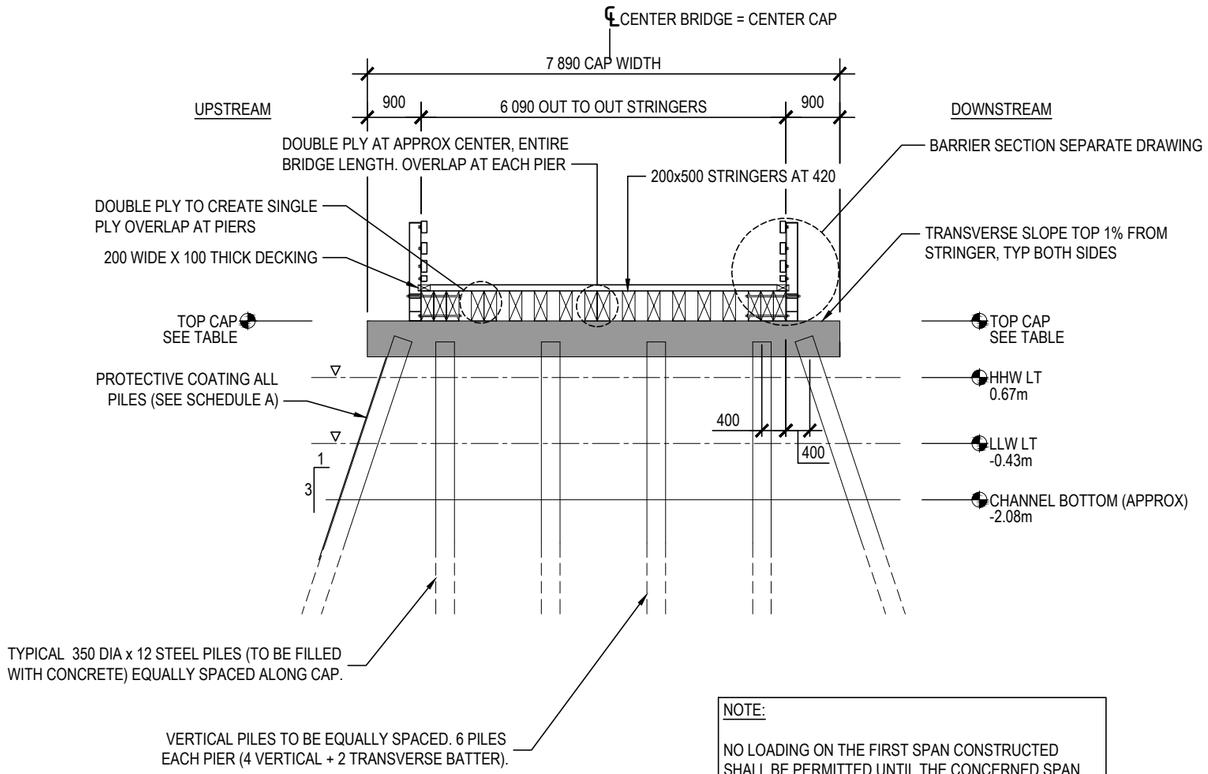

NOTE:

NO LOADING ON THE FIRST SPAN CONSTRUCTED SHALL BE PERMITTED UNTIL THE CONCERNED SPAN IS POSITIVELY CONNECTED TO BOTH THE ABUTMENT AND PIER CAP.

1 / S8 PIER SECTION -TYPICAL
1:100

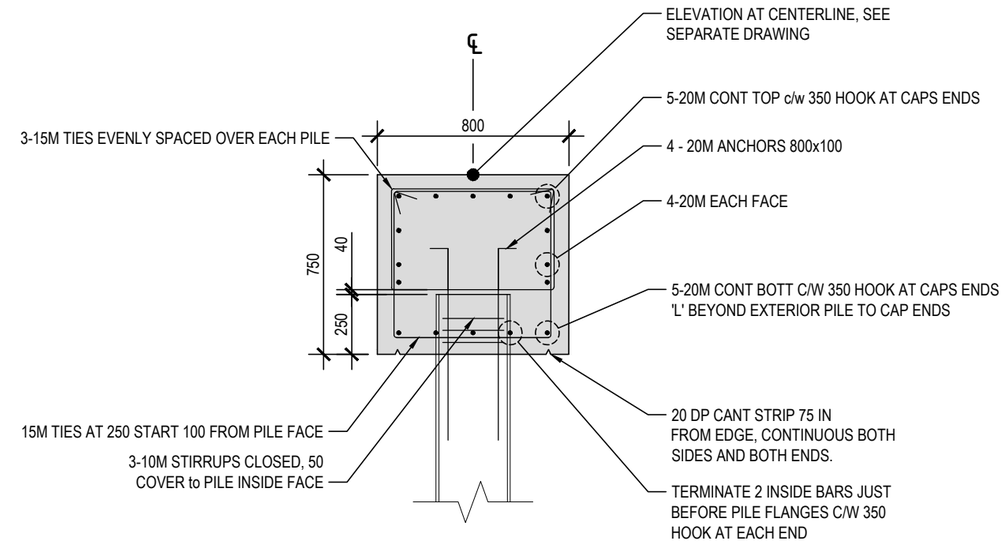

NOTE:

1. PLACE HARDWOOD SHIMS BETWEEN u/s STRINGER AND CAP, SHOULD STRINGER NOT FULLY BEAR ALONG CAP WIDTH AND STRINGER WIDTH
2. TOP AND SIDE BAR LENGTHS, INCLUDING END HOOKS, TO HAVE NO SPLICES.
3. ENTIRE SURFACE AREA OF CAP (TOP, BOTTOM, AND SIDES) TO RECEIVE CONCRETE SEALER (HYDROZO 100) ENTIRE AREA PRIOR TO STRINGER INSTALLATION.

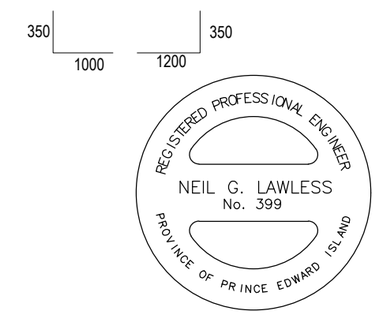

2 / S8 PIER CAP - TYPICAL
1:25

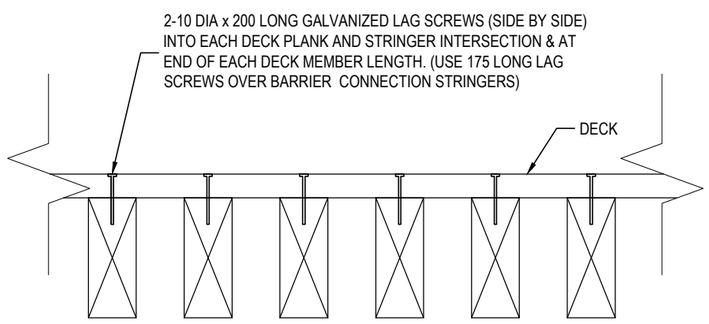

NOTE:

1. SCREW HEAD FLUSH WITH TOP OF DECK.

3 / S8 DECK TO STRINGER CONNECTION - TYPICAL
1:25

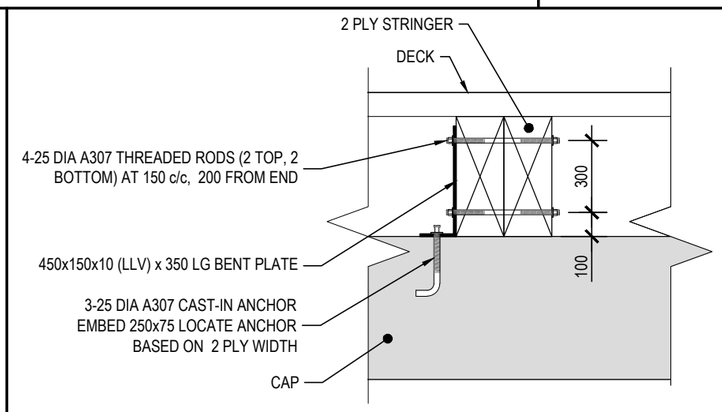

4 / S8 STRINGER TO CAP CONNECTION - CENTERLINE (ABUT & PIER)
1:25

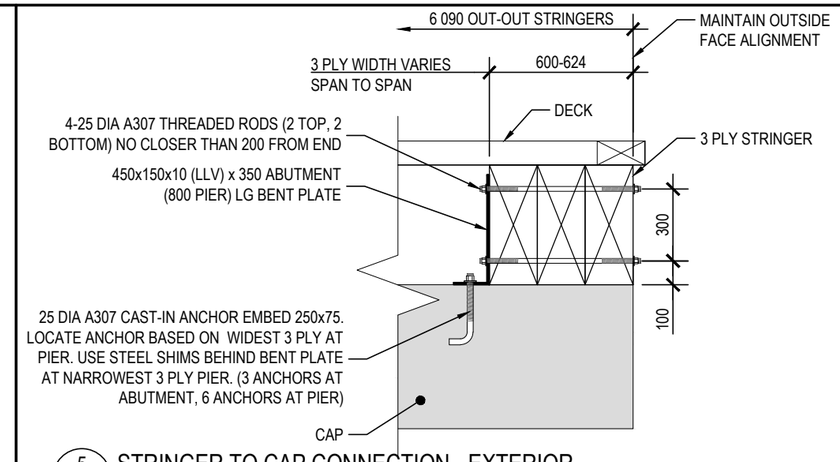

5 / S8 STRINGER TO CAP CONNECTION - EXTERIOR
1:25

Prince Edward Island CANADA

DEPT OF TRANSPORTATION, INFRASTRUCTURE, AND ENERGY
Tel 902 368 5100
Fax 902 368 5395
http://www.gov.pe.ca/
PO Box 2000
Charlottetown
Prince Edward Island
Canada C1A 7N8

ALL WORK SHALL BE CONDUCTED IN ACCORDANCE WITH TIE's STANDARD SPECIFICATIONS AND ENVIRONMENTAL PROTECTION PLAN (EPP).

MAINTAIN ENVIRONMENTAL CONTROLS UNTIL VEGETATION HAS ESTABLISHED OR AS INSTRUCTED ON SITE.

ALL DRIVEWAY CULVERTS AND SIDE SLOPES SHALL BE MIN. 3H:1V

SURVEY BY:	T.I.E.	SCALE:	AS NOTED
DRAWN BY:	K. MACEACHERN	COUNTY:	PRINCE
APPROVED BY:	N. LAWLESS		
PROJECT No.:	2020003		

No.	REVISIONS	DATE
0	ISSUED FOR TENDER	FEB. 5, 2020

STATIONING:

CONTROL SECTION:

JOB: GUNNS BRIDGE REPLACEMENT

SHEET NAME: SECTION & DETAILS 2

SHEET No. S8 OF 12

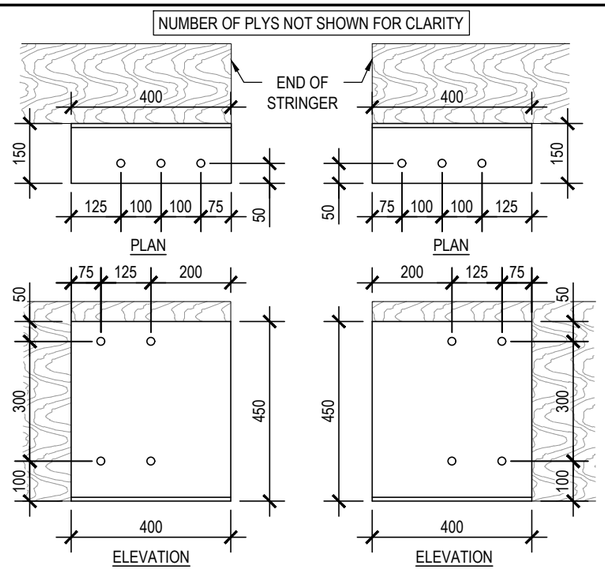

1 / S9 PIER CONNECTION PLATES - CENTERLINE
1:15

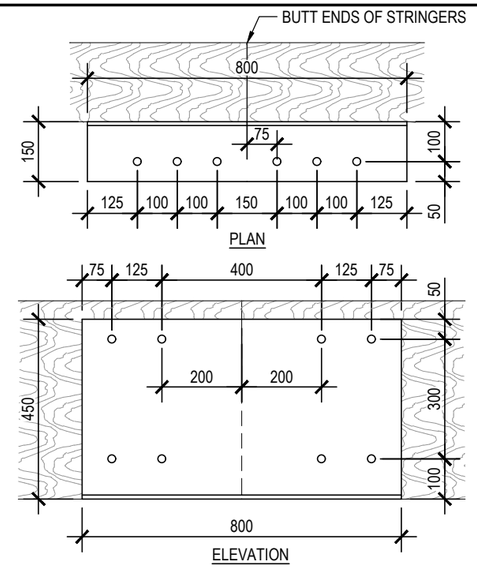

2 / S9 PIER CONNECTION PLATES - EXTERIOR
1:15

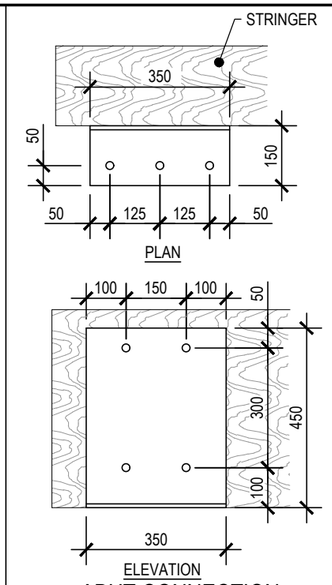

3 / S9 ABUT CONNECTION PLATES - C/L & EXTERIOR
1:15

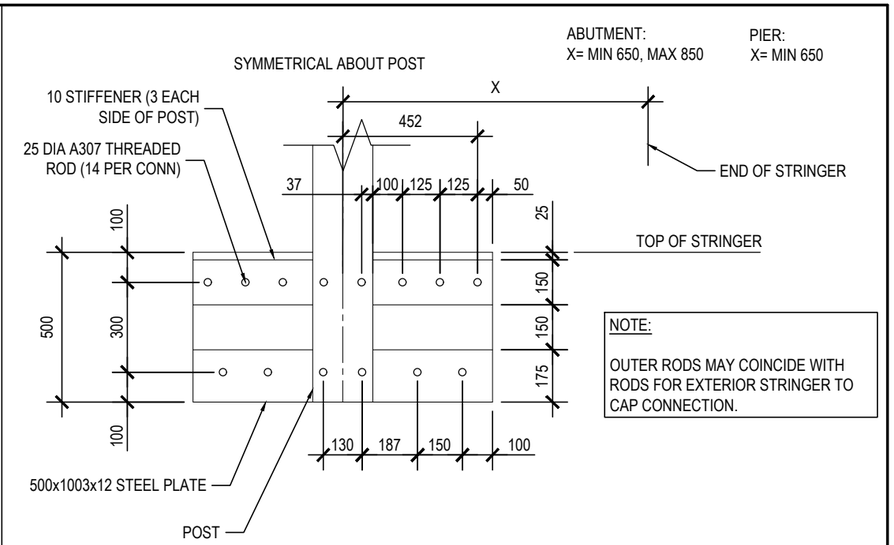

4 / S9 BARRIER POST ANCHORAGE - ELEVATION
1:15

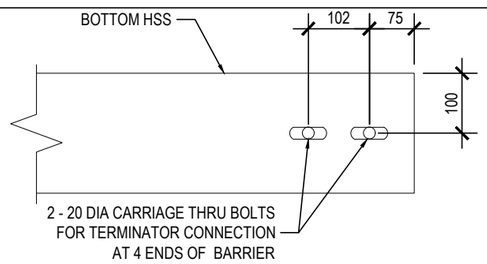

5 / S9 FLEXBEAM TERMINATOR CONNECTION
1:20

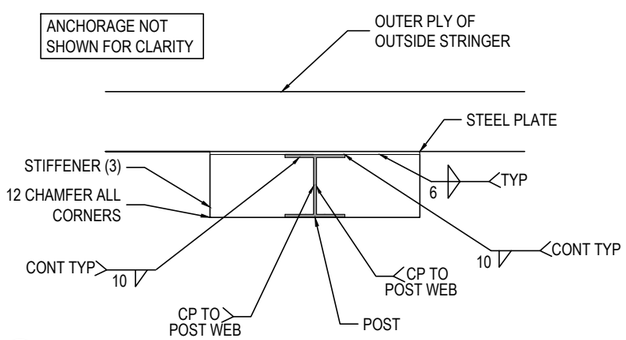

6 / S9 PLAN - BARRIER POST ANCHORAGE
1:20

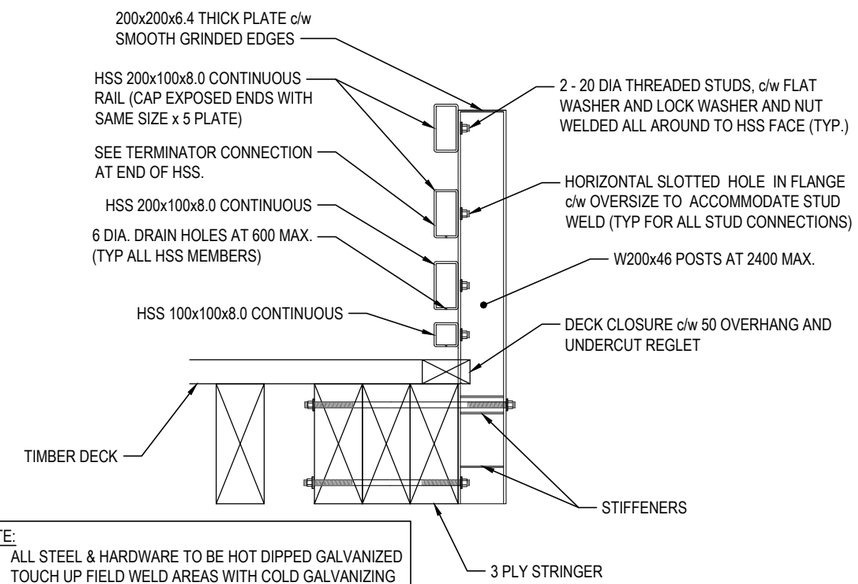

NOTE:
1. ALL STEEL & HARDWARE TO BE HOT DIPPED GALVANIZED
2. TOUCH UP FIELD WELD AREAS WITH COLD GALVANIZING
3. ALL NUTS TO BE FULLY THREADED/ENGAGED, WITH EXPOSED THREAD BEYOND NUT.
4. ALL CONNECTIONS TO HAVE FLAT WASHER, LOCK WASHER, AND NUT.

DESCRIPTIONS

7 / S9 BARRIER SECTION - TYPICAL
1:25

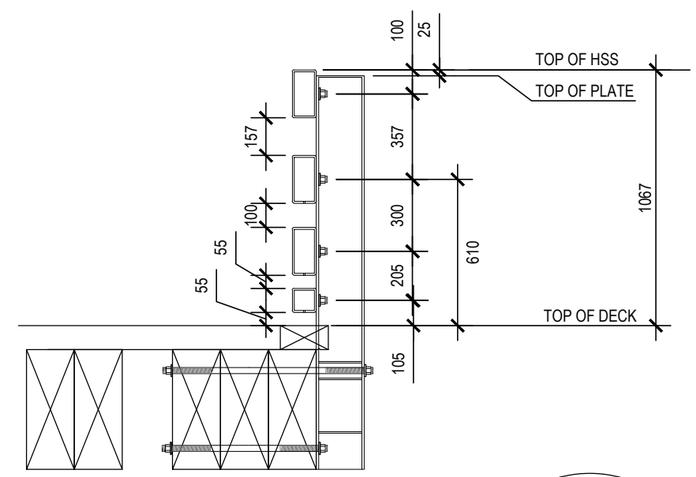

DIMENSIONS

REGISTERED PROFESSIONAL ENGINEER
NEIL G. LAWLESS
No. 399
PROVINCE OF PRINCE EDWARD ISLAND

Prince Edward Island CANADA
DEPT OF TRANSPORTATION, INFRASTRUCTURE, AND ENERGY
Tel 902 368 5100
Fax 902 368 5395
http://www.gov.pe.ca/
PO Box 2000
Charlottetown
Prince Edward Island
Canada C1A 7N8

ALL WORK SHALL BE CONDUCTED IN ACCORDANCE WITH TIE's STANDARD SPECIFICATIONS AND ENVIRONMENTAL PROTECTION PLAN (EPP).

MAINTAIN ENVIRONMENTAL CONTROLS UNTIL VEGETATION HAS ESTABLISHED OR AS INSTRUCTED ON SITE.

ALL DRIVEWAY CULVERTS AND SIDE SLOPES SHALL BE MIN. 3H:1V

SURVEY BY:	T.I.E.	SCALE:	AS NOTED
DRAWN BY:	K. MACEACHERN	COUNTY:	PRINCE
APPROVED BY:	N. LAWLESS		
PROJECT No.:	2020003		

No.	REVISIONS	DATE
0	ISSUED FOR TENDER	FEB. 5, 2020

STATIONING:

CONTROL SECTION:

JOB: GUNNS BRIDGE REPLACEMENT

SHEET NAME: CONNECTIONS AND BARRIER DETAILS

SHEET No. S9 OF 12

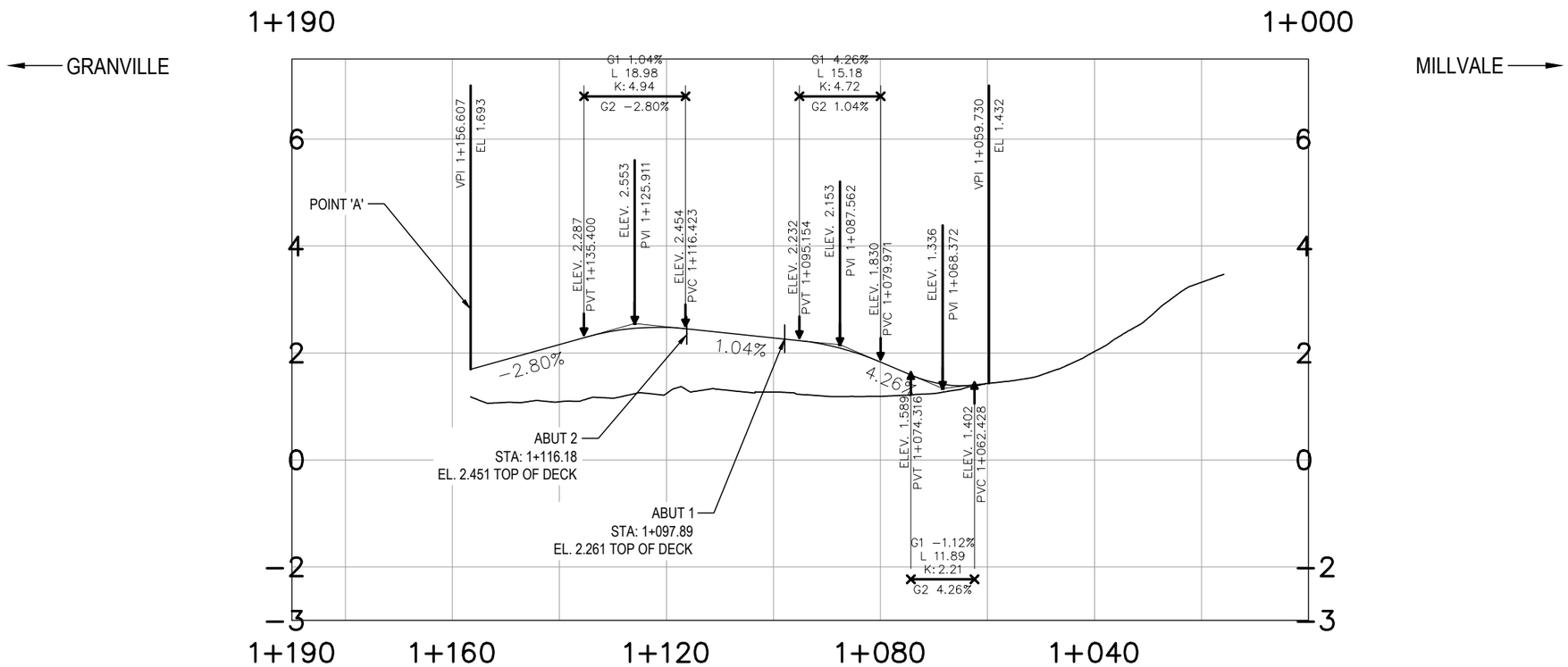

Existing		1.088	1.242	1.270	1.190	1.431	2.027	3.323
Proposed		2.158	2.478	2.283	1.831	1.429		
Cut Depth						0.001		
Fill Height		1.071	1.236	1.012	0.641			

1 / S10 VERTICAL PROFILE AT CENTERLINE
1:1000

No.	Profile Curve Type	Length	Total Curve Length	Grade	K Value	Start Station	Start Elevation	End Station	End Elevation	Grade In	Grade Out	Grade Change	PVI Station	PVI Elevation
1		13.518m		−3.69%		1+016.00m	2.336m	1+029.52m	1.837m					
2	Sag	22.262m	22.262m		6	1+029.52m	1.837m	1+051.78m	1.429m	−3.69%	0.02%	3.71%	1+040.65m	1.427m
3		45.688m		0.02%		1+051.78m	1.429m	1+097.47m	1.439m					
4	Crest	13.647m	13.647m		6.5	1+097.47m	1.439m	1+111.12m	1.298m	0.02%	−2.08%	−2.10%	1+104.29m	1.440m
5		10.414m		−2.08%		1+111.12m	1.298m	1+121.53m	1.082m					

2 / S10 VERTICAL ALIGNMENT REPORT AT CENTERLINE
N.T.S.

REGISTERED PROFESSIONAL ENGINEER
NEIL G. LAWLESS
No. 399
PROVINCE OF PRINCE EDWARD ISLAND

Prince Edward Island CANADA
DEPT OF TRANSPORTATION, INFRASTRUCTURE, AND ENERGY
Tel 902 368 5100
Fax 902 368 5395
http://www.gov.pe.ca/
PO Box 2000
Charlottetown
Prince Edward Island
Canada C1A 7N8

ALL WORK SHALL BE CONDUCTED IN ACCORDANCE WITH TIE's STANDARD SPECIFICATIONS AND ENVIRONMENTAL PROTECTION PLAN (EPP).

MAINTAIN ENVIRONMENTAL CONTROLS UNTIL VEGETATION HAS ESTABLISHED OR AS INSTRUCTED ON SITE.

ALL DRIVEWAY CULVERTS AND SIDE SLOPES SHALL BE MIN. 3H:1V

SURVEY BY:	T.I.E.	SCALE:	AS NOTED
DRAWN BY:	K. MACEACHERN	COUNTY:	PRINCE
APPROVED BY:	N. LAWLESS		
PROJECT No.:	2020003		

No.	REVISIONS	DATE
0	ISSUED FOR TENDER	FEB. 5, 2020

STATIONING:
CONTROL SECTION:
JOB: GUNNS BRIDGE REPLACEMENT
SHEET NAME: PROFILE - ROUTE 240
SHEET No. S10 OF 12

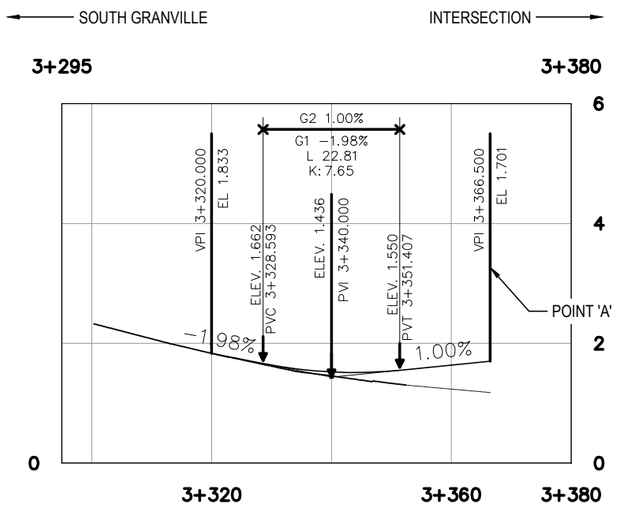

Existing	1.833	1.455	
Proposed	1.833	1.521	1.636
Cut Depth	0.000		
Fill Height	0.000	0.066	

1 S11 VERTICAL PROFILE AT CENTERLINE - MCCOURT ROAD
1:1000

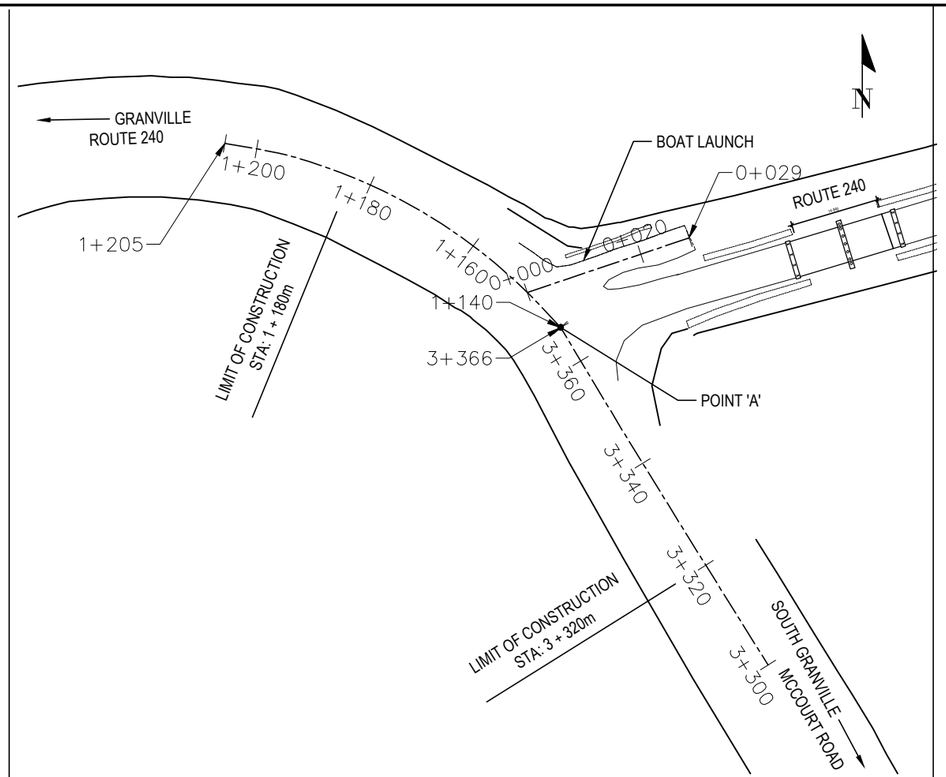

2 S11 PLAN
1:1000

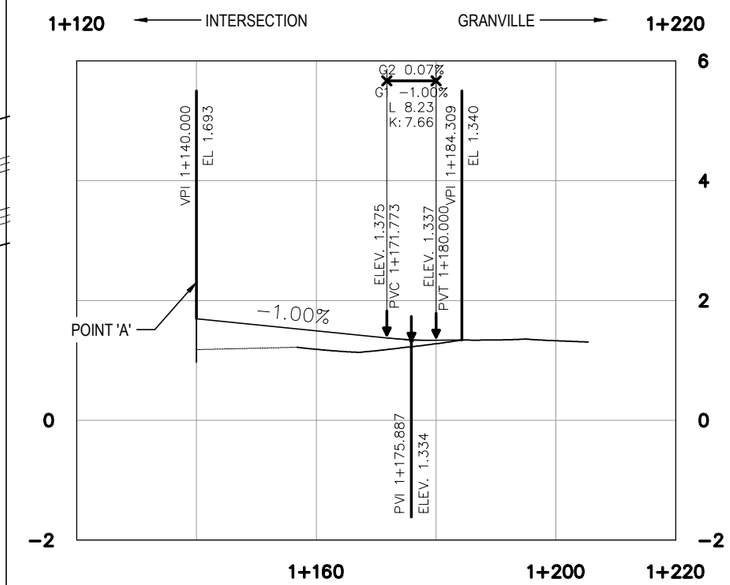

Existing	1.185	1.278	1.328
Proposed 1.693	1.493	1.337	
Cut Depth			
Fill Height	0.308	0.059	

3 S11 VERTICAL PROFILE AT CENTERLINE - ROUTE 240
1:1000

REGISTERED PROFESSIONAL ENGINEER
NEIL G. LAWLESS
No. 399
PROVINCE OF PRINCE EDWARD ISLAND

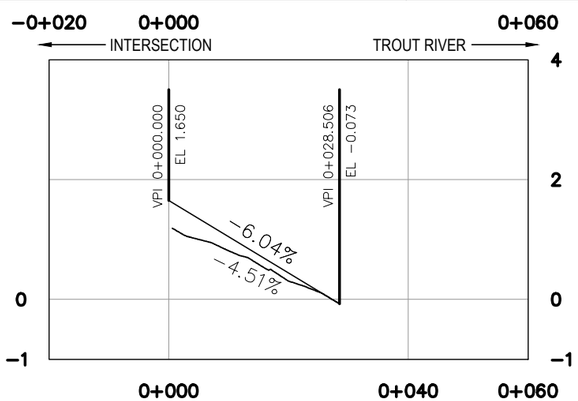

Existing	
Proposed	1.650
Cut Depth	
Fill Height	

4 S11 BOAT LAUNCH RAMP PROFILE
1:1000

No.	Type	Profile Curve Type	Length	Grade	K Value	Start Station	Start Elevation	End Station	End Elevation	Grade In	Grade Out	Grade Change	PVI Station	PVI Elevation
1	Tangent		8.593m	−1.98%		3+320.00m	1.833m	3+328.59m	1.662m					
2	Symmetric Parabola	Sag	22.815m		7.652	3+328.59m	1.662m	3+351.41m	1.550m	−1.98%	1.00%	2.98%	3+340.00m	1.436m
3	Tangent		15.093m	1.00%		3+351.41m	1.550m	3+366.50m	1.701m					

5 S11 VERTICAL ALIGNMENT REPORT AT CENTERLINE - MCCOURT ROAD
N.T.S.

No.	Type	Profile Curve Type	Length	Grade	K Value	Start Station	Start Elevation	End Station	End Elevation	Grade In	Grade Out	Grade Change	PVI Station	PVI Elevation
1	Tangent		31.773m	−1.00%		1+140.00m	1.693m	1+171.77m	1.375m					
2	Symmetric Parabola	Sag	8.227m		7.664	1+171.77m	1.375m	1+180.00m	1.337m	−1.00%	0.07%	1.07%	1+175.89m	1.334m
3	Tangent		4.309m	0.07%		1+180.00m	1.337m	1+184.31m	1.340m					

6 S11 VERTICAL ALIGNMENT REPORT AT CENTERLINE - ROUTE 240
N.T.S.

Prince Edward Island CANADA
DEPT OF TRANSPORTATION, INFRASTRUCTURE, AND ENERGY
Tel 902 368 5100
Fax 902 368 5395
http://www.gov.pe.ca/
PO Box 2000
Charlottetown
Prince Edward Island
Canada C1A 7N8

ALL WORK SHALL BE CONDUCTED IN ACCORDANCE WITH TIE's STANDARD SPECIFICATIONS AND ENVIRONMENTAL PROTECTION PLAN (EPP).

MAINTAIN ENVIRONMENTAL CONTROLS UNTIL VEGETATION HAS ESTABLISHED OR AS INSTRUCTED ON SITE.

ALL DRIVEWAY CULVERTS AND SIDE SLOPES SHALL BE MIN. 3H:1V

SURVEY BY:	T.I.E.	SCALE:	AS NOTED
DRAWN BY:	K. MACEACHERN	COUNTY:	PRINCE
APPROVED BY:	N. LAWLESS		
PROJECT No.:	2020003		

No.	REVISIONS	DATE
0	ISSUED FOR TENDER	FEB. 5, 2020

STATIONING:
CONTROL SECTION:
JOB: GUNNS BRIDGE REPLACEMENT
SHEET NAME: PROFILE - MCCOURT ROAD
SHEET No. S11 OF 12

Alignment Report: GUNNS ALIGNMENT

TAG No	STATION	CURVE/SPIRAL/TANGET DATA	NORTHING	EASTING
L6	1+015.800 1+059.928	LENGTH: 44.128	707820.792 707808.630 TANGENT DIRECTION: 254°00'06"	366331.201 366288.783
C4	1+061.850	LENGTH: 3.844 RADIUS: 200.000 DELTA: 1°06'04" DEGREE OF CURVATURE (ARC): 8°35'40" CHORD: 3.844 MID-ORDINATE: 0.009	707808.100 TANGENT DIRECTION: 254°00'06"	366286.935
L5	1+063.772 1+087.456	LENGTH: 23.685	707807.606 707801.517 TANGENT DIRECTION: 255°06'11"	366285.078 366262.189
C3	1+090.223	LENGTH: 5.533 RADIUS: 200.000 DELTA: 1°35'07" DEGREE OF CURVATURE (ARC): 8°35'40" CHORD: 5.533 MID-ORDINATE: 0.019	707800.806 TANGENT DIRECTION: 255°06'11"	366259.515
L4	1+092.990 1+156.607	LENGTH: 63.618	707800.021 707781.972 TANGENT DIRECTION: 253°31'04"	366256.862 366195.858

1 S12 HORIZONTAL ALIGNMENT REPORT - ROUTE 240
N.T.S.

TAG No	STATION	CURVE/SPIRAL/TANGET DATA	NORTHING	EASTING
L9	1+140.000 1+143.579	LENGTH: 3.579	707781.946 707784.578 TANGENT DIRECTION: 317°20'07"	366195.866 366193.440
C6	1+166.841	LENGTH: 45.541 RADIUS: 90.664 DELTA: 28°46'47" DEGREE OF CURVATURE (ARC): 18°57'32" CHORD: 45.063 MID-ORDINATE: 2.844	707801.683 TANGENT DIRECTION: 317°20'07"	366177.676
L8	1+189.120 1+190.784	LENGTH: 1.664	707809.085 707809.615 TANGENT DIRECTION: 288°33'20"	366155.624 366154.046
C5	1+194.957	LENGTH: 8.329 RADIUS: 53.382 DELTA: 8°56'21" DEGREE OF CURVATURE (ARC): 32°11'58" CHORD: 8.320 MID-ORDINATE: 0.162	707810.943 TANGENT DIRECTION: 288°33'20"	366150.090
L7	1+199.113 1+205.372	LENGTH: 6.259	707811.640 707812.686 TANGENT DIRECTION: 279°36'59"	366145.976 366139.805

2 S12 HORIZONTAL ALIGNMENT REPORT - ROUTE 240 NORTHWEST
N.T.S.

REGISTERED PROFESSIONAL ENGINEER
NEIL G. LAWLESS
No. 399
PROVINCE OF PRINCE EDWARD ISLAND

NOTE: NEW TOE OF SLOPE TO NOT GO BEYOND EXISTING TOE OF SLOPE

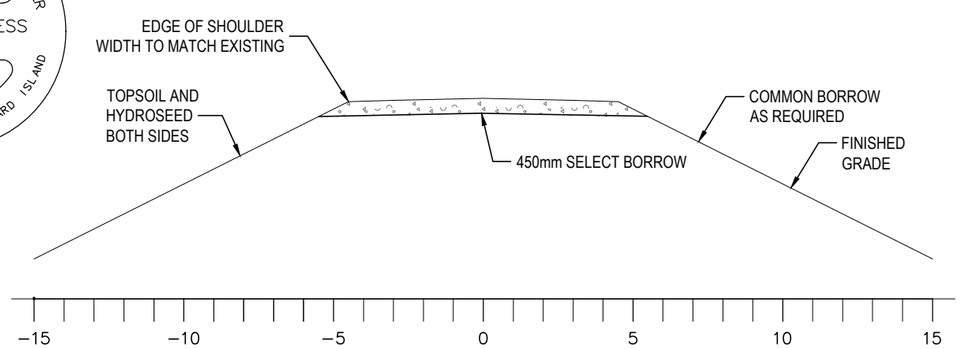

3 S12 TYPICAL ROAD SECTION
N.T.S.

TAG No	STATION	CURVE/SPIRAL/TANGET DATA	NORTHING	EASTING
L11	3+300.320 3+325.347	LENGTH: 25.027	707725.572 707746.797 TANGENT DIRECTION: 328°00'11"	366230.522 366217.261
C7	3+345.758	LENGTH: 40.821 RADIUS: 1762.472 DELTA: 1°19'37" DEGREE OF CURVATURE (ARC): 0°58'31" CHORD: 40.820 MID-ORDINATE: 0.118	707764.107 TANGENT DIRECTION: 328°00'11"	366206.445
L10	3+366.168 3+366.497	LENGTH: 0.329	707781.663 707781.946 TANGENT DIRECTION: 329°19'48"	366196.034 366195.866

4 S12 HORIZONTAL ALIGNMENT REPORT - MCCOURT ROAD
N.T.S.

Prince Edward Island CANADA
DEPT OF TRANSPORTATION, INFRASTRUCTURE, AND ENERGY
Tel 902 368 5100
Fax 902 368 5395
http://www.gov.pe.ca/
PO Box 2000
Charlottetown
Prince Edward Island
Canada C1A 7N8

ALL WORK SHALL BE CONDUCTED IN ACCORDANCE WITH TIE's STANDARD SPECIFICATIONS AND ENVIRONMENTAL PROTECTION PLAN (EPP).

MAINTAIN ENVIRONMENTAL CONTROLS UNTIL VEGETATION HAS ESTABLISHED OR AS INSTRUCTED ON SITE.

ALL DRIVEWAY CULVERTS AND SIDE SLOPES SHALL BE MIN. 3H:1V

SURVEY BY:	T.I.E.	SCALE:	AS NOTED
DRAWN BY:	K. MACEACHERN	COUNTY:	PRINCE
APPROVED BY:	N. LAWLESS		
PROJECT No.:	2020003		

No.	REVISIONS	DATE
0	ISSUED FOR TENDER	FEB. 5, 2020

STATIONING:
CONTROL SECTION:
JOB: GUNNS BRIDGE REPLACEMENT
SHEET NAME: ROAD REPORT
SHEET No. S12 OF 12